NORGREN
ENGINEERING ADVANTAGE

ACTUATORS

Norgren offers one of the industry's most comprehensive line of pneumatic actuators. From 7/16" to 12" bores, NFPA, ISO, rodless, compacts, and many more. Choose from an assortment of construction materials. Made to order and custom applications are our specialty, and we provide quick turnaround.

ACTUATORS

The complete selection of Norgren pneumatic actuators and accessories

Ecology Seal

Ecology Seal
Benefits and availability

ACT-2

NFPA aluminum and steel cylinders

Series A and J
Aluminum and steel, 1-1/2" to 12" bores
250 psi*
-20°F to 200°F*

ACT-6

Rodlock Option
Passive or manual, 1-1/2" to 6" bores
60 to 120 psi
33°F to 150°F*

ACT-27

NEN NFPA
Aluminum, 1-1/2", 2", 2-1/2", 3-1/4", and 4" bores
140 psi
-25°F to 140°F*

ACT-32

Value added Solutions
Examples of Norgren Engineering Advantage

ACT-38

LS Series Thrusters
1-1/2" and 2" bores
250 psi.
-20°F to 200°F

ACT-40

* See catalog page

NORGREN
ENGINEERING ADVANTAGE

ACTUATORS

Series SS actuators

NFPA
Interchangeable

Series D, SS Stainless steel
1-1/8" bore
250 psi*
-20°F to 250°*

ACT-46

Series D, SS Stainless steel
1-1/2" to 8" bores
250 psi*
-20°F to 250°*

ACT-50

Series N actuators

NFPA
Interchangeable

Non-rotating
1-1/8" to 4" bores
250 psi
-20°F to 200°

ACT-56

Tiny Tim Series actuators

Series ET, T, & VT
3/4" and 1-1/8" bores
150 psi
-20°F to 200°

ACT-62

NFPA interchangeable
TA, TAV, and TAE
3/4", 1", and 1-1/8" bores
150 psi
-20°F to 200°*

ACT-68

* See catalog page

Norgren.com/usa – 303.794.2611 – help@amer.norgren.com

ACTUATORS

Rack & Pinion Rotary Actuators

Single, double, Integral & Air/Oil minis
1/2" and 3/4" bores
150 psi
-20°F to 200°F*

ACT-74

Single, double, Integral & Air/Oil
1-1/8", and 2-1/2" bores
150 psi*
-20°F to 200°F*

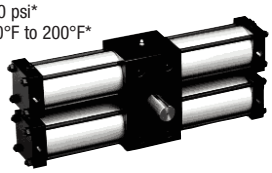

ACT-77

ISO/VDMA Actuators

DA/8000, Double acting
32 to 320 mm bores
15 to 232 psi*
-4°F to 176°F

ACT-84

Guide blocks
32 to 100 mm bores
15 to 232 psi
32°F to 176°F

ACT-92

Profile Cylinders, Double acting
32 to 125 mm bores
15 to 232 psi
-4°F to 176°F

ACT-96

Piston rod locking unit
32 to 125 mm bores
58 to 145 psi
32°F to 176°F

ACT-100

LINTRA® PLUS Rodless cylinders

Internal Guide
16 to 80 mm bores
14.5 to 116 psi
-22°F to 176°F

ACT-102

External Guide
16 to 80 mm bores*
14.5 to 116 psi
-22°F to 176°F

ACT-110

Precision Roller Guide
Ø 25 to 63 mm bores
14.5 to 116 psi
-22°F to 176°F

ACT-114

* See catalog page

NORGREN
ENGINEERING ADVANTAGE

ACTUATORS

LINTRA-Lite Rodless cylinders

25 to 40 mm bores
116 psi
-22°F to 180°F

ACT-128

Roundline Plus Stainless steel body actuators

5/16" to 3" bores
Single and double acting
250 psi
-20°F to 200°F*

ACT-134

RPHD Series magnetic
9/16" to 2-1/2" bores
250 psi
-20°F to 200°F*

ACT-148

RPD Series Delrin® End cap,
Double acting
9/16" to 2" bores
125 psi
32°F to 160°F

ACT-152

RT Series Roundline Thrusters
9/16" and 3" bores
250 psi.
-20°F to 200°F

ACT-156

F-Series Plus cylinders

Single and double acting

9/16" to 4" bores
200 psi
-40°F to 200°F*

ACT-160

FPT Series Twin Rod
3/4" to 2" bores
200 psi
-40°F to 200°F*

ACT-168

* See catalog page

Norgren.com/usa – 303.794.2611 – help@amer.norgren.com

ACTUATORS

Series 90000 Compact Actuators

Ø 12 to 100 MM

DC/91000M, DC/93000 Single acting
12 to 63 mm bores
145 psi
23°F to 176°F

ACT-172

DC/9200M, Double acting
12 to 100 mm bores
145 psi
23°F to 176°F

ACT-174

Magnetically operated switches

CS8, CS7, M/NEN

ACT-178

* See catalog page

NORGREN
ENGINEERING ADVANTAGE

Norgren Ecology Seal...

Where Cylinder Speed meets Quieter Cycles

The Ecology seal, in conjuction with a fixed cushion, provides faster and quieter cycles, without the undesireable high impact forces at the end of stroke!

The Ecology Seal is designed to work in conjunction with standard air cushion technology, and contributes up to 80% of the deceleration required at the end of stroke.

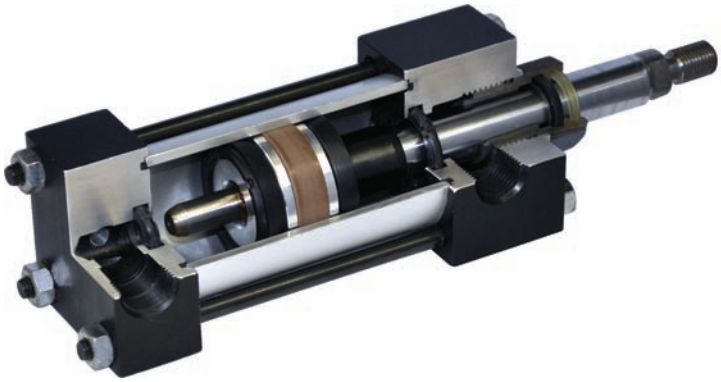

Norgren Ecology Seal Benefits

>> Machine Reliability

- Eliminates end of stroke impact forces, reducing vibration and component failures
- Eliminate potential pneumatic bounce

>> Increased Productivity

- Travel at higher speeds
- Up to 75% less travel time through cushion (25ms versus 100ms)
- Pre-engineered fixed cushion means no cushion screw to be adjusted or tampered with
- Reduce down time

>> Reduce System Costs

- Eliminate flow controls
- Ecology seal cylinder with fixed cushions is less expensive than conventional cushioned cylinder
- Reduce cylinder bore size
- Reduce set up time

>> Safe Work Environment

- Noise reduction - meets OSHA specifications
- Reduced equipment failures, minimizing injury risk

>> Industry Conformance

- Conforms to industry standard dimensions, does not add length
- Available in Viton
- Widely proven and desired throughout the industry

"By eliminating the cushion needle, the Ecology Seal Cylinder saves us 1-1/2 hours set up per machine." - A leading packaging OEM

Norgren.com/usa – 303.794.2611 – help@amer.norgren.com

Norgren Ecology Seal - How Does it Work?

The Ecology seal is a Nitrile material and designed for two functions.

1) It is a pressure compensating lip-type piston seal and performs as such throughout the stroke.
2) It's a dampening material for superior deceleration of the piston through the final increments of stroke.

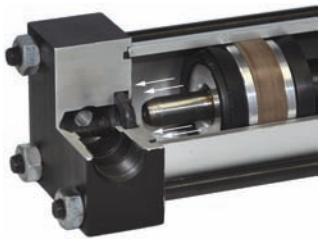

The air cushion starts the deceleration process. As the cylinder traverses towards the end of stroke, the exhausting air is free flowing through an unrestricted passage.

As the cushion spear enters the end cap, it blocks the free flowing path. The exhausting air is then forced through a very small, controlled orifice.

As the cylinder continues towards the end of stroke, the volume of air decreases, compressing the exhausing air. The exhausting air compresses to a high level, providing the deceleration force to slow the cylinder. The size of this controlled cushion orifice determines the rate of deceleration generated by the air cushion.

As the cylinder approaches the final stroke, the Ecology seal comes in contact with the end cap of the cylinder. The Ecology seal material is non-compressible, however, at full pressure, it is designed to move or deform in shape to allow the cylinder to achieve full stroke. The force required to deform this material is the final deceleration force used to bring the cylinder to a nice, smooth stop.

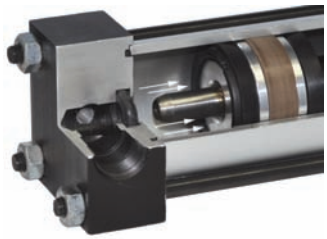

The Ecology seal also acts as a spring to assist in a quick release out of cushion as the cylinder initiates the traverse in the opposite direction.

NORGREN ENGINEERING ADVANTAGE

Ecology Seal

Norgren Ecology Test Data Examples

Compare Norgren Ecology Cylinders with Fixed cushions to cylinders with Adjustable cushions. Ecolgy cylinders yield less time through cushion and less bounce!

NORGREN ECOLOGY CYLINDERS with Non-Adjustable Cushions

2" Bore Rod End Cushion Test
Average deceleration force = 15 G's
Time consumed during cushioning = 0.030 sec.
Number of bounces: 1 Pneumatic – 1 Metallic

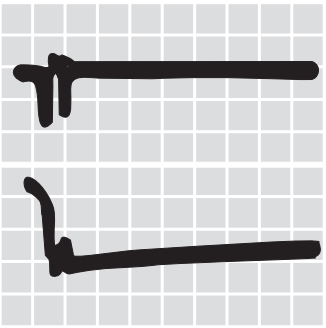

Acceleration: 1 div. = 10 G's
X Axis: 1 div. = .03 seconds

Velocity: 1 div. = 20 in/sec.
14.5 lbs. added to rod

NORGREN ECOLOGY CYLINDERS with Adjustable Cushions

2" Bore Rod End Cushion Test
Average deceleration force = 20 G's
Time consumed during cushioning = 0.015 sec.
Number of bounces: 1/2 Pneumatic – 0 Metallic

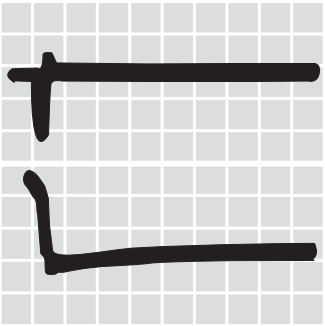

Acceleration: 1 div. = 10 G's
X Axis: 1 div. = .03 seconds

Velocity: 1 div. = 20 in/sec.
2.5 lbs. added to rod

COMPETITIVE CYLINDERS with Adjustable Cushions

2" Bore Rod End Cushion Test
Average deceleration force = 78 G's
Time consumed during cushioning = 0.120 sec.
Number of bounces: 2 Pneumatic – 4 Metallic

Acceleration: 1 div. = 10 G's
X Axis: 1 div. = .03 seconds

Velocity: 1 div. = 20 in/sec.
14.5 lbs. added to rod

Hear the difference between Ecology seal cylinders with fixed cushions and non-cushioned cylinders!

Summary of Sound Levels in Decibels

PSI Air Sound Pressure Level +		Cylinder Model Number			
		Ecology A0133B3 5" X 6"	EA0155B3 5" X 6"	Ecology A1133A3 2" X 6"	EA1155A3 2" X 6"
95 PSI+	End ++	108	73	110	74
	Side ++	112	84	110	81
50 PSI+	End ++	108	73	113	74
	Side ++	113	85	110	81

Complete technical data for the Ecology option can be found in the corresponding product line section of the catalog

Norgren Ecology Seal Application Tips

Use an Ecology Seal Cylinder

- When excess machine vibration due to pneumatic components is a concern
- To reduce noise levels
- When load deceleration is a concern
- When cushions are required, but speed cannot be sacrificed
- And eliminate flow controls
- Because traditional cylinder cushions are difficult to adjust with accuracy
- When the exposed cushion adjustment needle is not desired
- To reduce the effects of pneumatic bounce

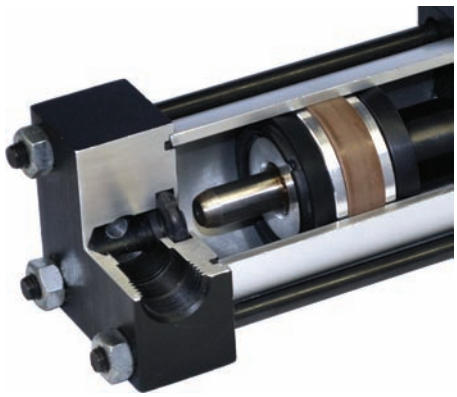

Norgren Ecology Seal Availability

The Patented Ecology Seal Technology has been made available across Norgren's most popular cylinder ranges. Incorporate the Ecology Seal into any of the ranges outlined below for impact dampening and noise reduction.

	A Series Aluminum NFPA Cylinder (EA Series with Ecology seals) Designation: **EA Prefix** Bore Sizes: 1-1/2", 2", 2-1/2", 3-1/4", 4", 5", 6", 7", 8", 10", 12" Available in viton Fixed Cushions or Adjustable Cushions
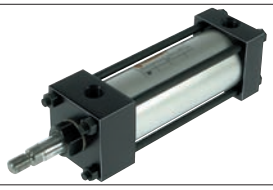	**J Series Steel NFPA Cylinder (EJ Series with Ecology Seals)** Designation: **EJ Prefix** Bore Sizes: 1-1/2", 2", 2-1/2", 3-1/4", 4", 5", 6", 7", 8", 10", 12" Available in Viton Fixed Cushions or Adjustable Cushions
	LS Series NFPA Linear Slides Designation: **"EA" or "EJ" in position 3 of model number** Bore Sizes: 1-1/2", 2" Available in Viton Fixed Cushions or Adjustable Cushions
	SS Series Stainless Steel NFPA Designation: **"6" in 11th position of model number** Bore Sizes: 1-1/8", 1-1/2", 2", 3-1/4", 4", 5", 6", 8" Available in Viton Fixed Cushions or Adjustable Cushions
	TAE Series NFPA Tiny Tim Bore Sizes: 3/4", 1", 1-1/8" **ET Series Non-NFPA Tiny Tim** Bore Sizes: 3/4", 1-1/8" Designation: **ET or TAE Prefix** Available in Viton Adjustable Cushions
	DA/8000 and PDA/182000 Series ISO/VDMA Cylinder Designation: **BDA or BPDA Prefix** Bore Sizes: 40mm, 50mm, 63mm, 80mm Adjustable Cushions
	RP Series Roundline Plus Disposable Cylinder Designation: **ERP Prefix** Bore Sizes: 3/4", 1-1/16", 1-1/4", 1-1/2", 2", 2-1/2" 3" Fixed Cushions or Adjustable Cushions
	RPD Series Delrin Roundline Plus Disposable Cylinder Designation: **ERPD Prefix** Bore Sizes: 3/4", 1-1/16", 1-1/2", 2" Fixed Cushions
	RT Series Roundline Plus Thrusters Designation: **ERT Prefix** Bore Sizes: 3/4", 1-1/16", 1-1/2", 2", 2-1/2", 3" Fixed Cushions or Adjustable Cushions

NORGREN ENGINEERING ADVANTAGE

NFPA Aluminum & Steel Cylinders

NFPA Series A Aluminum & J Steel Cylinders

1-1/2 to 12 inch bore size

Impact dampening seals

Adjustable captive cushion needle

Ecology cylinders meet OSHA noise standards

Constructed of the finest materials

Technical data

Medium:

Filtered compressed air to 250 PSI
Petroleum based hydraulic fluid to 400 PSI*

Operating temperature:

Series A & J -20°F to 200°F
with Viton Seals -20˚F to 400˚F

Operating Pressure:

250 PSIG Air, 400 PSIG Hydraulic* non-shock.

NOTE: EA and EJ max pressure rating: 150 psi.

Bore Sizes: 1-1/2", 2", 2-1/2", 3-1/4", 4", 5", 6", 7", 8", 10"*, 12"*

Lubrication:

None required

Norgren Air Cylinders are rated for "no lube added" service. All internal components are lubricated at time of assembly with a Teflon® based grease.

Materials

Head and End Caps:

(A and EA Series)
black anodized aluminum alloy
(J and EJ Series)
precision machined steel*

Tube:

A & EA Series 1-1/2" to 12"

J & EJ Series 1-1/2" to 2-1/2"

Aluminum alloy, clear anodized O.D., hard coat anodized I.D.

J & EJ Series 3-1/4" to 12" has steel tube, with hard chrome plated I.D.

Piston:

A & EA series: machined high-strength aluminum alloy.

J & EJ series: steel

Piston rod: hard chrome plated steel

Rod Bearing: oil impregnated sintered iron

Seals: nitrile rod seal, urethane rod wiper, nitrile piston seals, nitrile tube end seals

Tie Rods: high-tensile strength steel

* J and EJ series only

1 Ultra Cushion® Seals: Advanced design features a unique, one-piece, compound seal of nitrile* captured within a precision machined groove. Linear and radial "float" of the cushion seals eliminates misalignment. Ultra Cushions provide exceptionally fast "out of cushion" stroke reversal. (Head and Cap Cushions are optional.)

*Nitrile seals on the 5/8" & 1" rod diameter.
For rod sizes 1-3/4" and larger, urethane seals are standard.

2 O-Ring Tube Seal: Nitrile is standard. (Viton is optional.)

3 Adjustable Captive Cushion Needle: A one-piece, precision threaded brass cushion adjustment screw with a threaded steel capture ring. It provides safe and precise cushion adjustment.

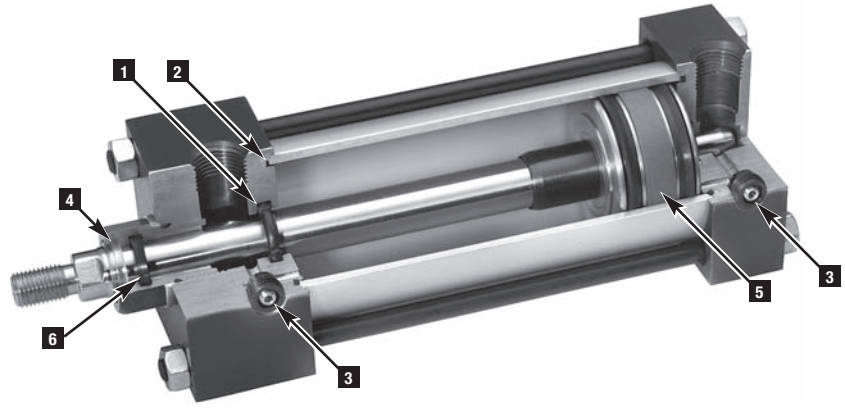

4 Wiper Seal: Lip-type urethane wiper seal keeps contaminates from getting into cylinder by aggressively wiping foreign materials from the piston rod, enhancing the rod seal life.

5 Wear Ring: Reinforced Teflon® compounded with polyphenylene sulfide provides supreme wear and excellent bearing support.

6 Rod Seal: Nitrile lip type seal is pressure energized and wear compensating for durability and long life.

Series A Cylinders are constructed with the finest materials for each component!

1 Piston Rod: Hard chrome plated high-tensile steel, ground and polished.

2 Rod Bearing: External removable threaded steel bearing housing (black oxide finish), with an oil-impregnated sintered iron rod bearing.

3 Rod Seal: Nitrile lip-type seal is pressure energized and wear compensating for durability and long life.

4 Head/Cap: Precision machined from alloy aluminum, then anodized for corrosion resistance (black finish).

5 Ultra Cushion® Seals: Advanced design features a unique, one-piece, compound seal of nitrile* captured within a precision machined groove. Linear and radial "float" of the cushion seals eliminates misalignment. Ultra Cushions provide exceptionally fast "out of cushion" stroke reversal. (Head and Cap Cushions are optional.)
*Nitrile seals on the 5/8" & 1" rod diameter.
For rod sizes 1-3/8" and larger, urethane seals are standard.

6 O-Ring Tube Seal: Buna is standard. (Viton is optional.)

7 Tie Rods: High-strength steel maintains uniform compression on tube end seals.

8 Piston: Machined solid aluminum alloy, light-weight for low inertia, yet strong. Threaded piston is installed with high strength threadlocker adhesive then staked to the piston rod.

9 Adjustable Captive Cushion Needle: A one-piece, precision threaded brass cushion adjustment screw with a threaded steel capture ring. It provides safe and precise cushion adjustment.

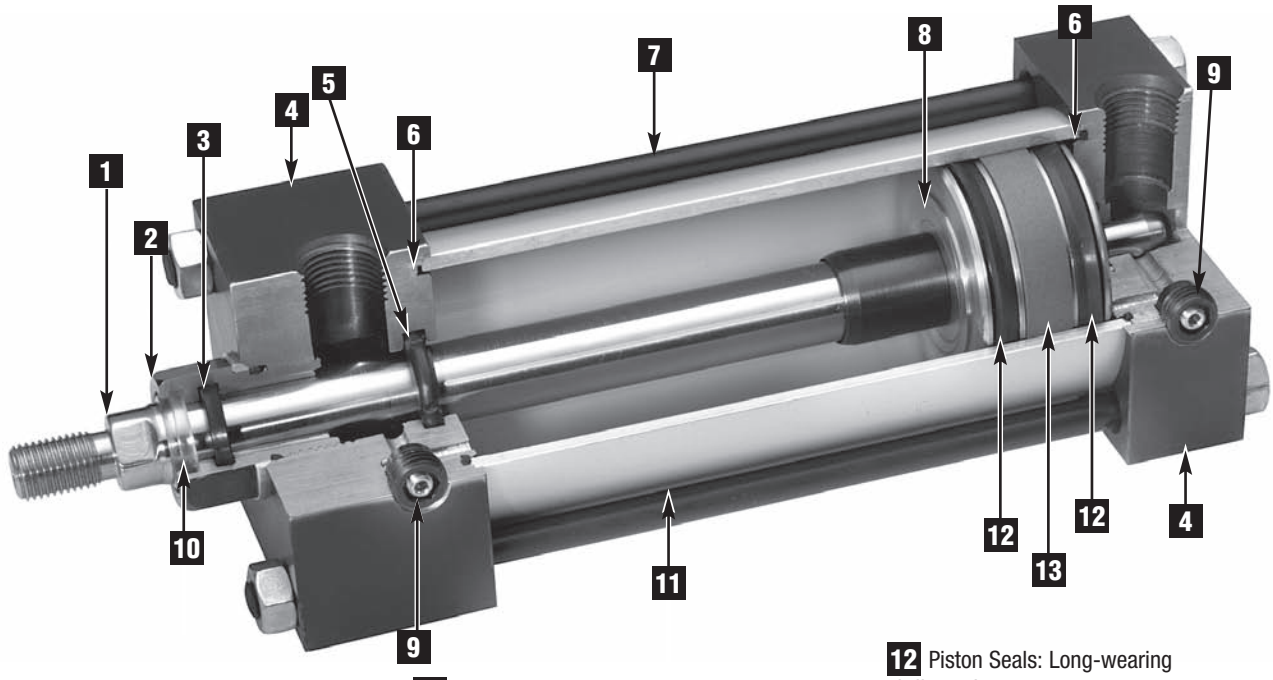

10 Wiper Seal: Lip-type urethane wiper seal keeps contaminates from getting into cylinder by aggressively wiping foreign materials from the piston rod, enhancing the rod seal life.

11 Cylinder Tube: High-strength aluminum alloy ideally suited for air service. The tube is clear anodized on the O.D. and hard anodic coated on the I.D., resulting in a smooth, corrosion and score resistant surface finish.

12 Piston Seals: Long-wearing nitrile seals.

13 Wear Ring: Reinforced Teflon® compounded with polyphenylene sulfide provides supreme wear and excellent bearing support.

Application Information
Series A NFPA interchangeable aluminum air cylinders are offered with a variety of accessories, standard and optional equipment to meet your application needs.

The addition of a Teflon® wear ring to the outer perimeter of the piston provides lubrication to the cylinder for an extended period of time over cylinders without a wear ring.

Standard non-cushioned Series A cylinders are recommended for applications that require full bottoming of the piston and where the noise emitted by the metal-to-metal impact between the piston and cylinder end caps is tolerable. We recommend that optional non-adjustable cushions be added for piston speeds (moving light tools) ranging from 15 to 30 in/sec. For speeds exceeding 30 in/sec, the cylinders should be equipped with adjustable air cushions.

NORGREN ENGINEERING ADVANTAGE

NFPA Aluminum & Steel Cylinders

Series EA Ecology Cylinders are constructed with the finest materials for each component!

1 Ultra Cushion® Seals: Advanced design features a unique, one-piece, compound seal of nitrile* captured within a precision machined groove. Linear and radial "float" of the cushion seals eliminates misalignment. Ultra Cushions provide exceptionally fast "out of cushion" stroke reversal. (Head and Cap Cushions are optional.)
*Nitrile seals on the 5/8" & 1" rod diameter.
For rod sizes 1-3/8" and larger, urethane seals are standard.

2 Impact Dampening Piston Seals: Our impact dampening piston seals, in conjunction with our advanced cushion design, decelerate and reduce end-of-stroke noise.

3 Piston: Machined solid aluminum alloy, light-weight for low inertia, yet strong. Threaded piston is installed with high strength threadlocker adhesive then staked to the piston rod.

4 O-Ring Tube Seal: Buna is standard. (Viton is optional.)

5 Adjustable Captive Cushion Needle (not shown): Fine thread allows for safe and precision adjustment of cushion.

6 Wiper Seal: Lip-type urethane wiper seal keeps contaminates from getting into cylinder by aggressively wiping foreign materials from the piston rod, enhancing the rod seal life.

7 Piston Rod: Hard chrome plated high-tensile steel, ground and polished.

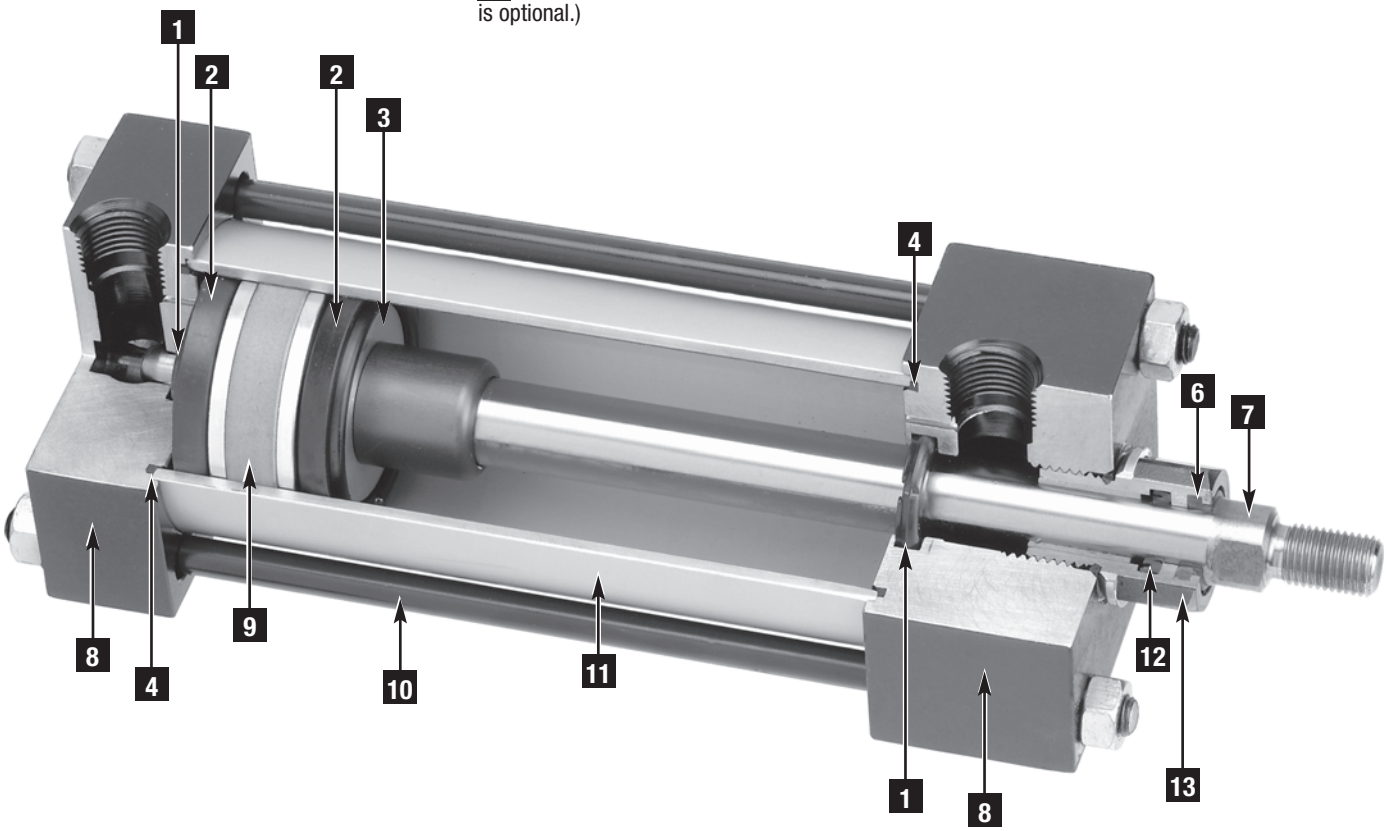

8 Head/Cap: Precision machined from alloy aluminum, then anodized for corrosion resistance (black finish).

9 Wear Ring: Reinforced Teflon® compounded with polyphenylene sulfide provides supreme wear and excellent bearing support.

10 Tie Rods: High-strength steel maintains uniform compression on tube end seals.

11 Cylinder Tube: High-strength aluminum alloy ideally suited for air service. The tube is clear anodized on the O.D. and hard anodic coated on the I.D., resulting in a smooth, corrosion and score resistant surface finish.

12 Rod Seal: Nitrile lip-type seal is pressure energized and wear compensating for durability and long life.

13 Rod Bearing: External removable steel bearing housing (black oxide finish), with an oil-impregnated sintered iron rod bearing.

NFPA Aluminum & Steel Cylinders

Series J Cylinders are constructed with the finest materials for each component!

1 Piston Rod: Hard chrome plated high-tensile steel, ground and polished.

2 Rod Bearing: External removable threaded steel bearing housing (black oxide finish), with an oil-impregnated sintered iron rod bearing.

3 Rod Seal: Nitrile lip-type seal is pressure energized and wear compensating for durability and long life.

4 Head/Cap: Precision machined from steel, then black oxide finished 1-1/2" to 2-1/2" bores. Painted black finish on 3-1/4" to 12" bores.

5 Ultra Cushion® Seals: Advanced design features a unique, one-piece, compound seal of nitrile* captured within a precision machined groove. Linear and radial "float" of the cushion seals eliminates misalignment. Ultra Cushions provide exceptionally fast "out of cushion" stroke reversal. (Head and Cap Cushions are optional.)
*Nitrile seals on the 5/8" & 1" rod diameter.
For rod sizes 1-3/8" and larger, urethane seals are standard.

6 O-Ring Tube Seal: Buna is standard. (Viton is optional.)

7 Rods: High-strength steel maintains uniform compression on tube end seals.

8 Piston: Machined solid steel, for high strength. Threaded piston is installed with high strength threadlocker adhesive then staked to the piston rod.

9 Adjustable Captive Cushion Needle: A one-piece, precision threaded brass cushion adjustment screw with a threaded steel capture ring. It provides safe and precise cushion adjustment.

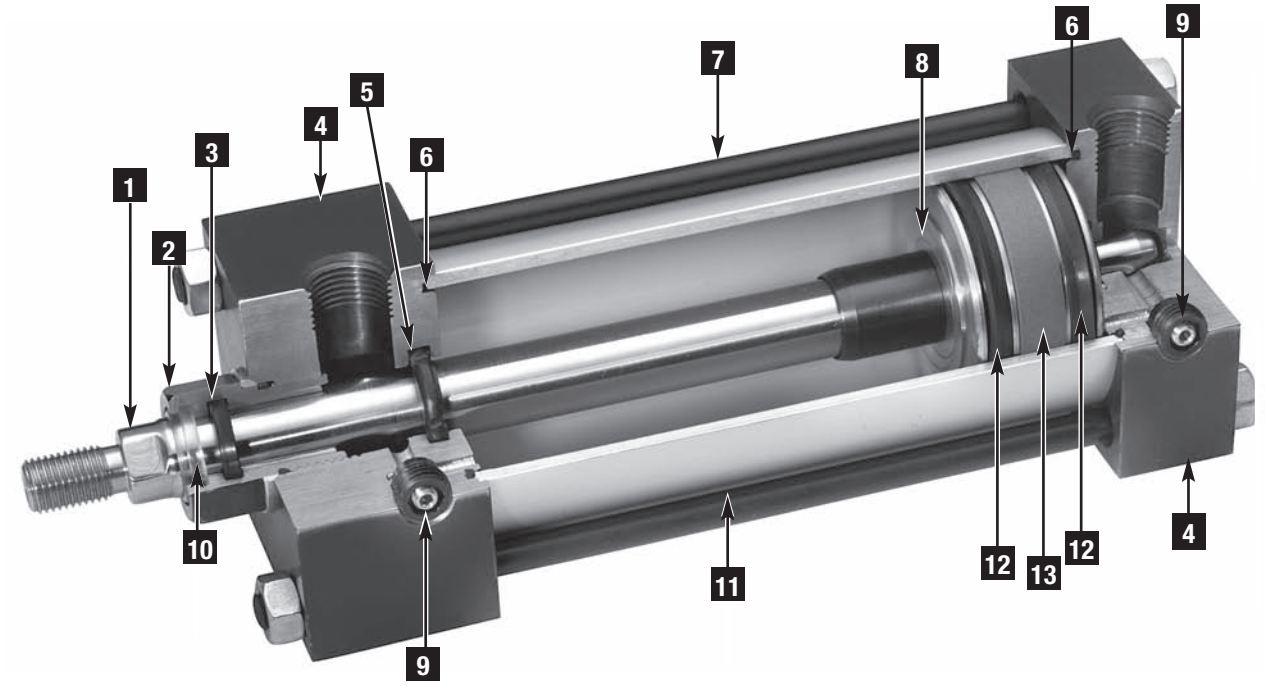

10 Wiper Seal: Lip-type urethane wiper seal keeps contaminates from getting into cylinder by aggressively wiping foreign materials from the piston rod, enhancing the rod seal life.

11 Cylinder Tube: High-strength aluminum alloy 1-1/2", 2", 2-1/2" bore anodized on the O.D. and hard coat I.D. Steel cylinder tube hard chrome plated I.D. 3-1/4" to 12" bore.

12 Piston Seals: Long-wearing nitrile seals.

13 Wear Ring: Reinforced Teflon® compounded with polyphenylene sulfide provides supreme wear and excellent bearing support.

Application Information

Series J NFPA interchangeable steel air cylinders are offered with a variety of accessories, standard and optional equipment to meet your application needs.

The addition of a Teflon® wear ring to the outer perimeter of the piston provides lubrication to the cylinder for an extended period of time over cylinders without a wear ring.

Standard non-cushioned Series J cylinders are recommended for applications that require full bottoming of the piston and where the noise emitted by the metal-to-metal impact between the piston and cylinder end caps is tolerable. We recommend that optional non-adjustable cushions be added for piston speeds (moving light tools) ranging from 15 to 30 in/sec. For speeds exceeding 30 in/sec, the cylinders should be equipped with adjustable air cushions.

NORGREN ENGINEERING ADVANTAGE

NFPA Aluminum & Steel Cylinders

Series EJ Ecology Cylinders are constructed with the finest materials for each component!

1 Ultra Cushion® Seals: Advanced design features a unique, one-piece, compound seal of nitrile* captured within a precision machined groove. Linear and radial "float" of the cushion seals eliminates misalignment. Ultra Cushions provide exceptionally fast "out of cushion" stroke reversal. (Head and Cap Cushions are optional.)

*Nitrile seals on the 5/8" & 1" rod diameter.
For rod sizes 1-3/8" and larger, urethane seals are standard.

2 Impact Dampening Piston Seals: Our impact dampening piston seals, in conjunction with our advanced cushion design, decelerate and reduce end-of-stroke noise.

3 Piston: Machined solid steel, for high strength. Threaded piston is installed with high strength threadlocker adhesive then staked to the piston rod.

4 O-Ring Tube Seal: Buna is standard. (Viton is optional.)

5 Adjustable Captive Cushion Needle (not shown): Fine thread allows for safe and precision adjustment of cushion.\

6 Wiper Seal: Lip-type urethane wiper seal keeps contaminates from getting into cylinder by aggressively wiping foreign materials from the piston rod, enhancing the rod seal life.

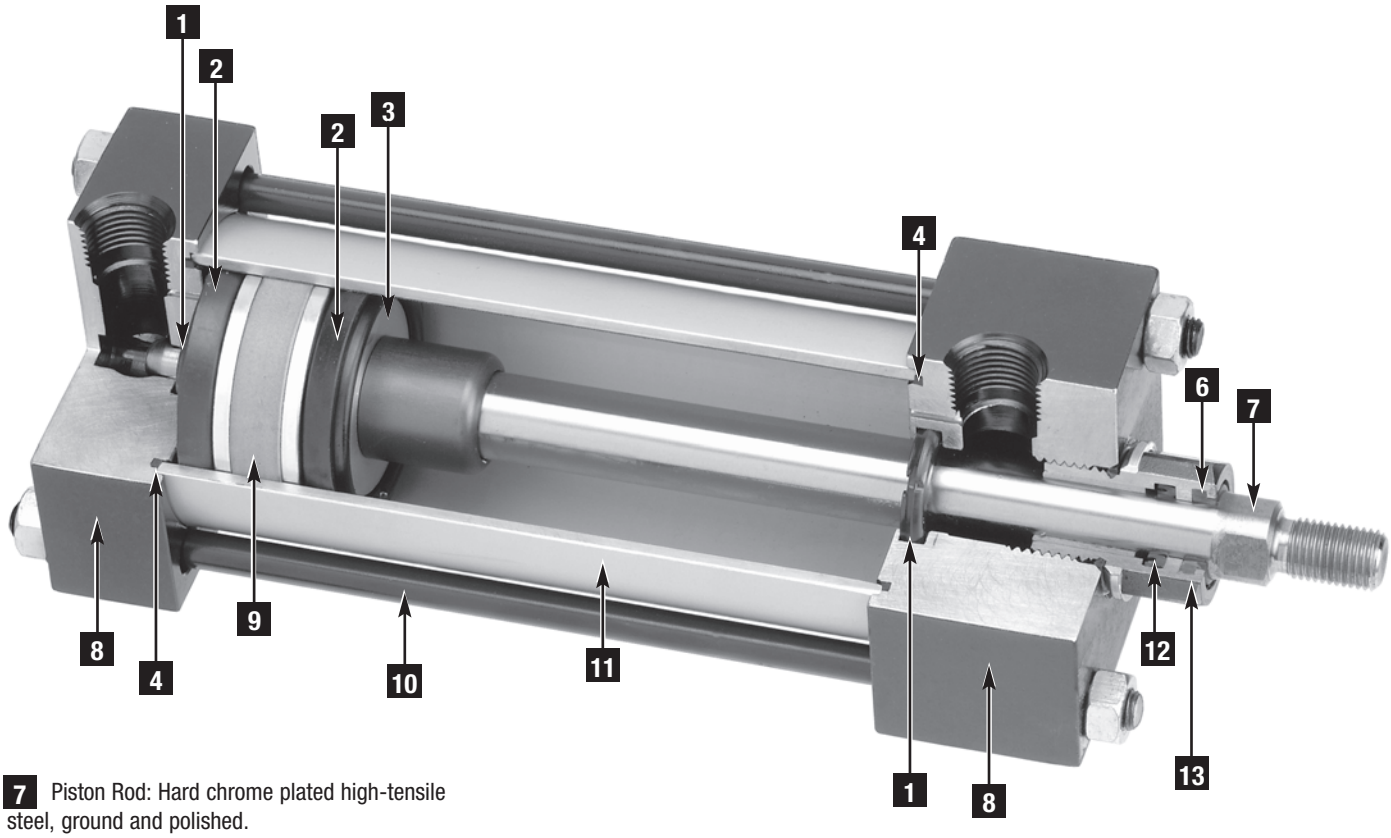

7 Piston Rod: Hard chrome plated high-tensile steel, ground and polished.

8 Head/Cap: Precision machined from steel, then black oxide finished 1-1/2" to 2-1/2" bores. Painted black finish 3-1/4" to 12" bores.

9 Wear Ring: Reinforced Teflon® compounded with polyphenylene sulfide provides supreme wear and excellent bearing support.

10 Tie Rods: High-strength steel maintains uniform compression on tube end seals.

11 Cylinder Tube: High-strength aluminum alloy 1-1/2", 2". 2-1/2" bore anodized on the O.D. and hard coat I.D. Steel cylinder tube hard chrome plated I.D. 3-1/4" to 12" bore.

12 Rod Seal: Nitrile lip-type seal is pressure energized and wear compensating for durability and long life.

13 Rod Bearing: External removable steel bearing housing (black oxide finish), with an oil-impregnated sintered iron rod bearing.

Norgren NFPA Ecology Cylinders offer these advantages:

1 Norgren cylinders are pre-lubriated for non-lube operation.

The piston rod is self-lubricated by the oil-impregnated rod bearing during operation. Lubrication between piston and cylinder barrel is derived from the polishing qualities of the reinforced Teflon® wear ring.

The low friction surfaces extend the life of the seals beyond normal expectations.

Series EA and EJ cylinders are NFPA interchangeable and are available in many different mounting styles.

2 Operates Quietly to Meet OSHA Specifications.

Series EA and EJ cylinders provide substantial reductions in impact noise, which reduces overall machine noise and helps meet government regulations.

The summary of sound decibels chart illustrates the operating sound levels.

The impact dampening qualities of the Piston Seals are guaranteed for ONE FULL YEAR!

Summary of Sound Levels in Decibels

PSI Air Sound Pressure Level+		Cylinder Model							
		J133B3 5" x 6"	EJ155B3 5" x 6"	J1133A3 2" x 6"	EJ1155A3 2" x 6"	A133B3 5" x 6"	EA155B3 5" x 6"	A1133A3 2" x 6"	EA1155A3 2" x 6"
95 PSI+	End++	108	73	110	74	108	73	110	74
	Side++	112	84	110	81	112	84	110	81
50 PSI+	End++	108	73	113	74	108	73	113	74
	Side++	113	85	110	81	113	85	110	81

+ Peak sound pressure is given in decibels (dB) re:2 x 10^5 N/m^2.

++End position of mike was 3' on centerline from end of cylinder; side position of mike was 3' perpendicular to centerline abeam of end of cylinder.

Note: At 5 feet, cylinder sound levels would be less by 9 dB from side figure and 13 dB from end figure. The total noise emitted will depend on the structure to which the cylinder is attached. If it is mounted on a thin flat plate of considerable area, the noise will be increased by a sounding board effect.

3 Energy Absorption Capacity of the Impact Dampening Seals

Series EA and EJ cylinders have a impact dampening piston seal that accomplishes 80% of the actual load stopping. The air cushion accounts for only 20%. (A conventional air cushioning cylinder depends 100% on the compressibility of air to do the stopping.) The Ecology seal absorbs high impact loads allowing the effect of the air cushion to be reduced by using a larger air cushion bleed orifice. As a result the piston can move at a faster speed for a longer period of time before the Ecology seal does the final stopping.

Energy Absorption Capacity of the Impact Dampening Seals

***Usable Pounds Stoppable at the Following Piston Speeds**

This chart features the energy absorption capacity of the impact dampening piston seals with a **Non-Adjustable** cushions. For higher loads and velocities please refer to the Decel- Air Cushion.

In/Sec	Cylinder Bore										
	1 1/2	2	2 1/2	3 1/4	4	5	6	7	8	10	12
6	155.6	275.5	499.8	969.3	1505.4	2603.2	4159.8	5794.2	8067.6	12,242	20,139
12	38.4	68.1	123.4	239.7	372.6	644.8	1030.2	1435.8	2000.4	3026	4971
18	16.7	29.7	53.7	104.6	162.8	282.1	450.6	628.7	876.8	1319.3	2162.1
24	9.2	16.3	29.4	57.3	89.4	155.2	247.8	346.2	483.6	722	1179
30	5.6	10.0	18.1	35.4	55.4	96.4	153.9	215.4	301.6	445.5	724
36	3.7	6.7	11.9	23.5	37.0	64.5	102.9	144.4	202.7	295.3	476.8
42	2.6	4.6	8.2	16.3	25.8	45.3	72.2	101.6	143.1	204.8	327.7
48	1.8	3.2	5.8	11.7	18.6	32.8	52.2	73.8	104.4	146	231
54	1.3	2.4	4.2	8.5	13.6	24.2	38.5	54.7	77.9	105.7	164.7
60	1.0	1.8	3.0	6.2	10.1	18.1	28.7	41.1	58.9	76.9	117.2

*The weight of the cylinder piston has been deducted from the figures shown above.

Note: The use of Viton® Seals limits the absorption of the impact dampening seals by 50%.

Energy absorption capacity of impact dampening piston seals w/ adjustable cushion.

In/Sec	Cylinder Bore										
	1 1/2	2	2 1/2	3 1/4	4	5	6	7	8	10	12
6	279	495	899	1,744	2,709	4,685	7,486	10,429	4,520	22,035	36,250
12	68	122	221	430	699	1,159	1,854	2,583	3,800	5,446	8,947
18	30	53	95	187	291	507	810	1,130	1,576	2,374	3,891
24	16	29	52	102	160	279	444	622	869	1,299	1,414
30	10	18	32	63	99	172	275	387	541	801	1,303
36	6.7	12	21.6	42	66	116	183	259	363	531	856
42	4.7	8.3	14.7	29	46	81	129	181	257	367	588
48	3.4	5.7	10.4	21	33	59	93	131	187	262	415
54	2.3	4.3	7.6	15.3	24	43	68	97	138	189	295
60	1.8	3.2	5.4	11	18	33	52	74	106	138	211

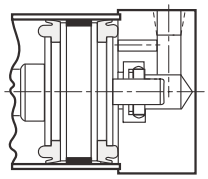

Piston and rod assembly for 1-1/2" thru 5" bore cylinders with 1/2" to 2" stroke

Effect of Impact Dampening Seals on Total Stroke of Cylinders

PSI	Cylinder Bore										
	1 1/2	2	2 1/2	3 1/4	4	5	6	7	8	10	12
0	.14	.15	.17	.19	.22	.25	.28	.32	.32	.36	.40
20	.10	.10	.12	.14	.16	.18	.20	.22	.22	.24	.26
40	.07	.07	.08	.09	.10	.12	.13	.14	.14	.15	.16
60	.04	.04	.05	.05	.06	.07	.07	.08	.08	.09	.10
80	.02	.02	.02	.02	.03	.03	.03	.04	.04	.04	.04
100	0	0	0	0	0	0	0	0	0	0	0

Note: These figures are for new cylinders. The impact dampening seals will take some compression set during operation of the cylinder and the stroke loss will decrease. Also, the pressure at zero stroke loss will decrease to about 80 psi. At pressures above those of zero stroke loss, a slight clicking sound may be produced during impact.

To determine the stroke loss for either the head or cap end, divide the value shown by 2.

NORGREN
ENGINEERING ADVANTAGE

NFPA Aluminum & Steel Cylinders

Cushion Function

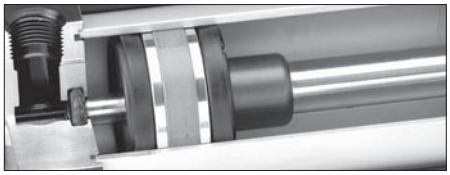

As the cushion spear enters the cushion cavity, the exhaust port becomes sealed off creating an air brake. This provides the initial deceleration in piston speed. The oversized air cushion bleed orifice permits the cushion pressure to exhaust with minimal restriction. This allows the piston to move quickly and smoothly through the cushion length.

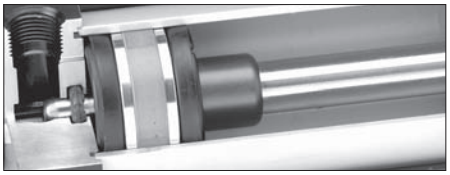

As the piston continues its travel to the point of impact with the end caps, the compressive qualities of the EJ seal provide the final decelerating force. This action compresses the EJ seal and absorbs the remaining kinetic shock vibration and noise created by the impact.

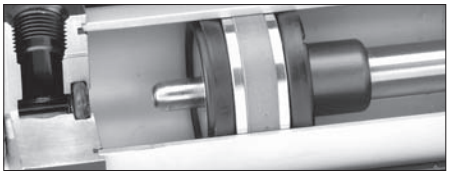

On the reverse stroke the EJ seal releases its compressive energy to propel the piston away from the end caps, producing an immediate breakaway.

Operating Temperatures:

Series A & J -20°F to 200°F (-29°C to 107°C)
with Viton Seals -20°F to 400°F (-29°C to 204°C)

Operating Pressure:

250 PSIG Air (17.2 Bar)
400 PSIG Hydraulic (27.6 Bar)
Bore Sizes: 1-1/2", 2", 2-1/2", 3-1/4", 4", 5", 6", 7", 8", 10", 12"

Supply:

Filtered compressed air to 250 PSI Petroleum based hydraulic fluid to 400 PSI

Lubrication:

None required
Norgren Air Cylinders are rated for "no lube added" service. All internal components are lubricated at time of assembly with a Teflon® based grease.

Materials:

Head and End Caps: precision machined steel
Tube: 6063-T832 aluminum, clear anodized O.D., hard coat anodized I.D.
Rod: hard chrome plated steel
Piston: machined high-strength aluminum alloy
Rod Bearing: oil impregnated sintered iron
Seals: nitrile rod seal, urethane rod wiper, nitrile piston seals, nitrile tube end seals
Tie Rods: high-tensile strength steel

Side Loading:

Cylinders are specifically designed to push and pull. Side loading (misalignment) of the piston rod should be avoided to ensure maximum operating performance and life.

Care should be taken during installation to properly align the load to be moved with the center line of the cylinder.
The use of a rod alignment coupler is strongly recommended whenever possible.

Air Cylinder Selection:

The proper application and selection of an air cylinder requires full consideration of the following: the fluid medium, operating pressures, mounting style, length of stroke, type of rod connection to the load, thrust or mounting tension on the rod, mounting attitude, speed of the stroke and how the load motion will be stopped.

The data that follows provides the necessary information in the evaluation of an average application and will help you in selecting the proper cylinder model and size for your particular application.

Note: 1-1/2", 2", 2-1/2", 3-1/4", 4" and 5" bore cylinders with 1/2" to 2" strokes will be furnished with a short head cushion sleeve and short cap cushion spear.
Only available on 5/8" and 1" rods.

The above specification applies to Series A and J cylinders with optional non-adjustable or adjustable cushions.

Series A & J Fixed Cushions

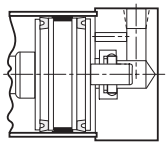

Piston and rod assembly for 1-1/2" thru 5" bore cylinders with 1/2" to 2" stroke.

Series EA & EJ Fixed Cushions

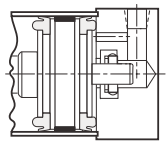

Piston and rod assembly for 1-1/2" thru 5" bore cylinders with 1/2" to 2" stroke

Ultra Cushion®

A Major Design and Performance Breakthrough in Air Cylinder Cushioning Systems!

Norgren's advanced cushion design features a unique, one-piece, nitrile compound seal that is captured within a precision machined groove. This allows both linear and radial "float" of the cushion seal which virtually eliminates problems associated with misalignment. Integral flow paths molded in the periphery of the seal provide exceptionally fast "out of cushion" stroke reversal without the use of ball checks.

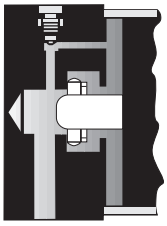

Figure 1

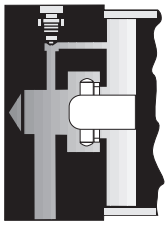

Figure 2 shows spear exiting cushion seal.

Norgren.com/usa – 303.794.2611 – help@amer.norgren.com

NFPA Aluminum & Steel Cylinders

Tests by the Milwaukee School of Engineering confirm Ecology Cylinder Cushions are more efficient, faster acting and bounce less!

NORGREN ECOLOGY CYLINDERS with Non-Adjustable Cushions

2" Bore Rod End Cushion Test
Average deceleration force = 15 G's
Time consumed during cushioning = 0.030 sec.
Number of bounces: 1 Pneumatic – 1 Metallic

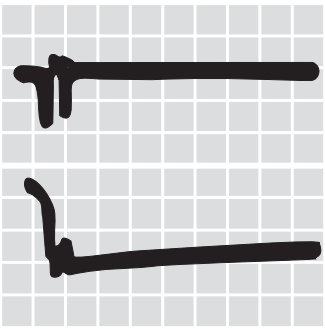

Acceleration: 1 div. = 10 G's
X Axis: 1 div. = .03 seconds

Velocity: 1 div. = 20 in/sec.
14.5 lbs. added to rod

NORGREN ECOLOGY CYLINDERS with Adjustable Cushions

2" Bore Rod End Cushion Test
Average deceleration force = 20 G's
Time consumed during cushioning = 0.015 sec.
Number of bounces: 1/2 Pneumatic – 0 Metallic

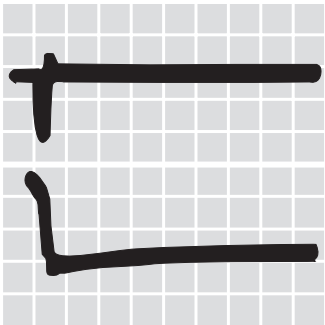

Acceleration: 1 div. = 10 G's
X Axis: 1 div. = .03 seconds

Velocity: 1 div. = 20 in/sec.
2.5 lbs. added to rod

COMPETITIVE CYLINDERS with Adjustable Cushions

2" Bore Rod End Cushion Test
Average deceleration force = 78 G's
Time consumed during cushioning = 0.120 sec.
Number of bounces: 2 Pneumatic – 4 Metallic

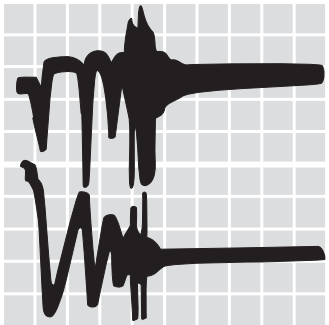

Acceleration: 1 div. = 10 G's
X Axis: 1 div. = .03 seconds

Velocity: 1 div. = 20 in/sec.
14.5 lbs. added to rod

2" Bore Cap End Cushion Test
Average deceleration force = 17.5 G's
Time consumed during cushioning = 0.025 sec.
Number of bounces: 1 Pneumatic – 1 Metallic

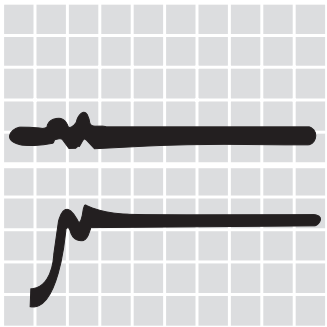

Acceleration: 1 div. = 10 G's
X Axis: 1 div. = .03 seconds

Velocity: 1 div. = 20 in/sec.
14.5 lbs. added to rod

2" Bore Cap End Cushion Test
Average deceleration force = 10 G's
Time consumed during cushioning = 0.020 sec.
Number of bounces: 1/2 Pneumatic – 0 Metallic

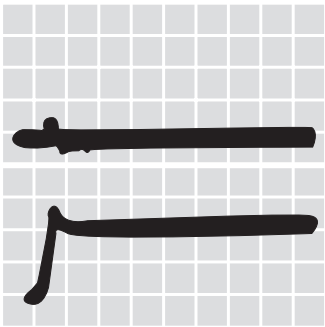

Acceleration: 1 div. = 10 G's
X Axis: 1 div. = .03 seconds

Velocity: 1 div. = 20 in/sec.
2.5 lbs. added to rod

2" Bore Cap End Cushion Test
Average deceleration force = 60 G's
Time consumed during cushioning = 0.120 sec.
Number of bounces: 3 Pneumatic – 4 Metallic

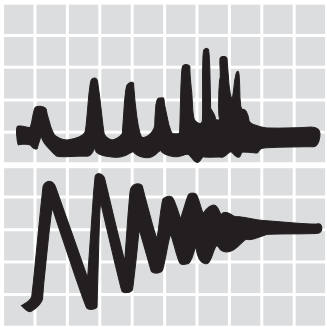

Acceleration: 1 div. = 10 G's
X Axis: 1 div. = .02 seconds

Velocity: 1 div. = 20 in/sec.
14.5 lbs. added to rod

2" Bore Cylinder Tests Results

Figures shown are average and not the result of each individual test. Piston velocity was regulated at 45 in/sec.

Cylinders with Cushions	Weight attached to Piston Rod (lbs)	Cushion Efficiency (G's* Created)	Cushioning Time (Ms)	Bounce Cycles During Cushioning
Norgren Ecology Adjustable	8.5	14.50	25.00	1.00
Norgren Ecology Non-Adjustable	8.5	17.50	26.25	1.75
Competitor A Adjustable	8.5	48.00	107.50	7.25
Competitor B Adjustable	8.5	32.75	102.50	6.50
Competitor C Adjustable	8.5	50.50	81.25	9.25

*Measured in G's of deceleration force created. All cylinders tested were NFPA types, front flange mounting, 6" stroke with standard diameter piston rods.

4" Bore Cylinder Tests Results

Figures shown are average and not the result of each individual test. Piston velocity was regulated at 25 in/sec.

Cylinders with Cushions	Weight attached to Piston Rod (lbs)	Cushion Efficiency (G's* Created)	Cushioning Time (Ms)	Bounce Cycles During Cushioning
Norgren Ecology Adjustable	54	5.25	40.00	3.25
Norgren Ecology Non-Adjustable	54	12.00	28.75	2.75
Competitor A Adjustable	54	11.50	92.50	6.75
Competitor B Adjustable	54	8.00	77.50	5.25
Competitor C Adjustable	54	6.50	67.50	6.25

*Measured in G's of deceleration force created. All cylinders tested were NFPA types, front flange mounting, 6" stroke with standard diameter piston rods.

NORGREN ENGINEERING ADVANTAGE

NFPA Aluminum & Steel Cylinders

Decel-Air Cushioned Cylinder

Eliminates the need for shock absorbers on air cylinder applications.

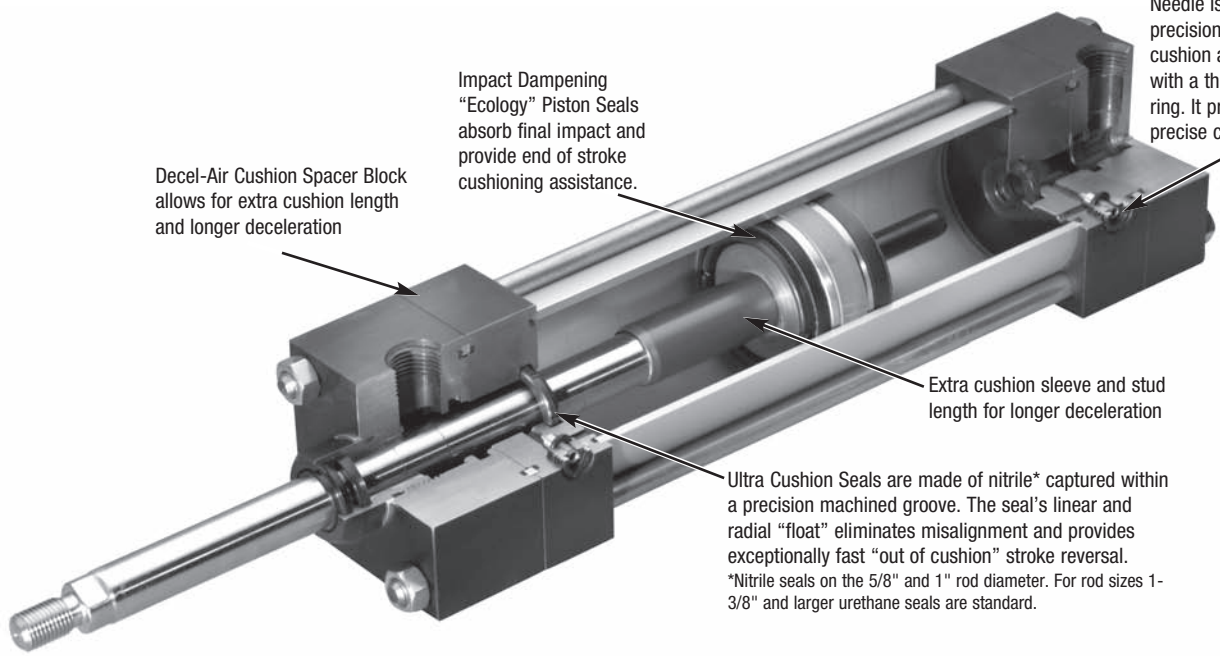

Explanation of Decel-Air Cushion:

Norgren's Decel Cushioned cylinder was designed for applications where high velocity, low mass, material transfer or machine function is required, and where the kinetic energy to be absorbed during cushioning exceeds the parameters of our standard Series EA or EJ air cylinders equipped with non-adjustable or adjustable cushions. Decel cushions employ longer-than-standard air cushions to assist our Impact Dampening Piston Seal.

Why does our Decel-Air Cushion work?

The extra cushion length of the Decel cushioned cylinder provides an additional deceleration capability to slow the cylinder's moving mass to a point where the positive cushioning effect of our Impact Dampening Piston Seals can perform the final cushioning.

Norgren's Decel-Air Cushioned Cylinders Versus Cylinder Mounted Shock Absorbers

The first extensive evaluation of pneumatic cylinder cushion performance was undertaken by the Mechanical Engineering Department of The Ohio State University. The test was conducted on 2-1/2" bore, 12" stroke.
The OSU tests found the Decel Cushioned cylinders absorbed almost three times as much kinetic energy with a lower level of peak cushion as a standard Ecology seal configured cylinder.

Because air is compressible and is exhausted out of the cylinder each cycle, the internal heat buildup is minimized. The **"Maximum Inch Pounds Per Hour"** rating which is essential in determining the effectiveness of shock absorber performance is **not needed** to judge Decel cushion performance.

The test indicated that Norgren Decel-Air Cushioned cylinders could prove to be superior to a hydralic shock absorber assisted cylinder for high cycle, high velocity applications with light to moderate loading (precisely the area where most severe cylinder applications exist). The cycle rates and the cushioning times of the Decel-Air Cushioned cylinders and the hydraulic shock absorber assisted cylinders were comparable.*

Decel-Air Cushioned cylinders are also less costly than shock absorber mounted cylinders and are self-contained units.

*For comparative evaluation, a well-known hydraulic shock absorber was chosen. The OSU tests showed a smooth shock-absorbing operation was achieved at very low velocities using the shock absorbers, but at comparable Decel Cushion cylinder velocities, a high mechanical impact took place on the shock absorber mounted cylinder.

Potential Decel-Air Cushion Applications

1. Conveyors & Material Handling Equipment
2. Transfer Machines & Shuttle Tables
3. Packaging Machinery
4. Foundry Equipment
5. Automatic Gate Opening & Closing

NFPA Aluminum & Steel Cylinders

The Decel Cushioned cylinder increases the kinetic energy absorption capability by increasing the effective cushion spear length in the cylinder.

The Decel Cushioned cylinder increases the standard cushion spear length by 100%, allowing an increase in kinetic energy absorption capability by two times.

Decel Cushioned Cylinder
Fully Cushioned Load Stopping Capacity in Pounds*

In/	Cylinder Bore										
Sec	1-1/2	2	2-1/2	3-1/4	4	5	6	7	8	10	12
6	558	990	1.798	3.488	5.418	9.370	14.972	20.040	20.858	44.070	72.500
12	136	244	442	860	1.338	2.318	3.708	5.166	7.600	10.892	17.894
18	60	106	190	374	582	1.014	1.620	2.260	3.152	4.748	7.782
24	32	58	104	204	320	558	888	1.244	1.738	2.598	2.828
30	20	36	64	126	198	344	550	774	1.082	1.602	2.606
36	13.4	24	43	84	132	232	366	518	726	1.062	1.712
42	9.4	16.6	29	58	92	162	258	362	514	734	1.176
48	6.8	11.4	20.8	42	66	118	186	262	374	524	830
54	4.6	8.6	10.8	30	48	86	136	194	276	378	590

*Include piston rod wight in total load to be stopped.

Piston Rod Dia. Weights*	
5/8"	- .30 lb. + 0.09 lb./in. stroke
1"	- .90 lb. + 0.22 lb./in. stroke
1-3/8"	- 2.2 lb. + 0.42 lb./in. stroke
1-3/4"	- 4.0 lb. + 0.68 lb./in. stroke
2"	- 5.5 lb. + 0.90 lb./in. stroke
2-1/2"	- 10.1 lb. + 1.40 lb./in. stroke

Double Weight for double rod end cylinders

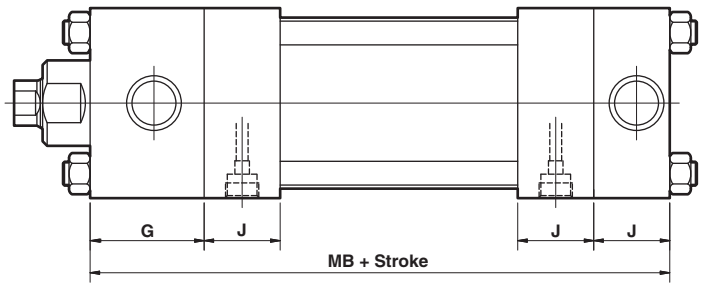

NOTE:
- All dimensions not shown are per STD NFPA dimensions
- For cylinders with (1) Decel Cushion AOL dimension wil be “MB”-“J”.

Decel Cushioned cylinder envelope dimensions are not NFPA dimensionally interchangeable over the stroke length.

Basic Envelope Dimensions

Cyl. Bore	G	J	Add Stroke MB
1-1/2	1-1/2	1	5-5/8
2	1-1/2	1	5-5/8
2-1/2	1-1/2	1	5-3/4
3-1/4	1-3/4	1-1/4	6-3/4
4	1-3/4	1-1/4	6-3/4
5	1-3/4	1-1/4	7
6	2	1-1/2	8
7	2	1-1/2	8-1/8
8	2	1-1/2	8-1/8

NORGREN ENGINEERING ADVANTAGE

NFPA Aluminum & Steel Cylinders

Cylinder Order Information

EJ 01 7 7 A 1 - HR–L(1 4)–MS–P(1/4) V - 2" x 6"

Bore and Stroke (write out)

Series

Series A Cylinder (Aluminum)	A
Series A Double Rod End Cylinder	DA
Series EA Cylinder	EA
Series EA Double Rod End Cylinder	EDA
Series J Cylinder (Steel)	J
Series J Double Rod End Cylinder	DJ
Series EJ Cylinder	EJ
Series EJ Double Rod End Cylinder	EDJ

Mounting Options

Side Tapped (MS4)	01
Head Rectangular Flange (MF1)	03
Head Square (ME3) – 7" & 8" Bores	03
Cap Rectangular Flange (MF2)	04
Cap Square (ME4) – 7" & 8" Bores	04
Basic Cylinder No Mounting (MX0	05
Both Ends (4) Tie Rods Ext. (MX1)	06
Both Ends (2) Tie Rods Ext. (MX4)	6B
Cap Tie Rods Ext. (MX2)	6C
Head Tie Rods Ext. (MX3)	6R
Removable Head Trunnion (MT1) - A & EA	7R
Head Trunnion (MT1) - J & EJ	07
Removable Cap Trunnion (MT2) - A & EA	8R
Cap Trunnion (MT2) - J & EJ	08
Side Lugs (MS2)	09
Center Trunnion (MT4)	10
Side End Angles (MS1)	11
Cap Fixed Clevis (MP1)	12
Side End Lugs (MS7)	15
Sleeve Nut Construction (Universal)	16
Head Square Flange (MF5)	20
Cap Square Flange (MF6)	21
Detachable Cap Clevis (MP2)	22
Cap Fixed Eye (MP3)	32
Detachable Cap Eye (MP4)	42
Spherical Bearing	52
Base Bar (Not NFPA A & EA Only)	60

Cushion in Head

None	3
Non-Adjustable Cushion	†5
Adjustable Cushion (Position 2)	7
Decel Cushion	9

† Standard with EA & EJ

Cushion in Cap

None	3
Non-Adjustable Cushion	†5
Adjustable Cushion (Position 2)	7
Decel Cushion	9

† Standard with EA & EJ

Additional Options – order alphabetically

Case Hardened (50 Rc)	HR
Port Location position 1 standard: L(Head Cap) (specify position 1 thru 4 for head and/or cap)	L(_ _)
Rod Lock (passive)	LE
Low Friction	LF
Stroke Adjustment	A
Metal Rod Scraper	MS
Cushion Adjust Screw Location position 2 standard: N(Head Cap) (specify position 1 thru 4 for head and/or cap)	N(_ _)
Non-Standard Port Sizes: [specify port size for P(_H) head only, P(_C) cap only, or P(_) both head & cap]	*P(_)
Magnetic Piston – includes aluminum tube option - J & EJ	PS
Rod Stud	RS
Rod Extensions (specify length of additional rod extension)	RX
Stainless Steel tie-rods	S
303 Stainless Steel (Hard Chrome Plated)	SS
Stainless Steel bushing	SB
Stop Tube (Rod End) (specify stop tube length)	ST(_R)
Special Rod Threads (specify rod thread)	T
Thread Extensions (specify length of thread extension)	TX
Viton® Seals	V

* 1-1/2", 2", 2-1/2" bore cylinders have 3/8" NPT Standard, 1/2" NPT oversize. 3-1/4", 4", 5" bore cylinders have 1/2" NPT Standard, 3/4" NPT oversize.

Piston Rod Threads	Type	Dim ref
Small Male (Solid) (std)	1	KK
Intermediate Thread Male (Solid)	2	CC
Female	3	KK
Full Thread Male (Solid)	6	FF
Plain Rod End	7	–

Cyl bore	rod ltr.	rod dia. (mm)
1-1/2	A	5/8
	B+	1
2	A	5/8
	B	1
	C+	1-3/8
2-1/2	A	5/8
	B	1
	C	1-3/8
	D+	1-3/4
3-1/4	B	1
	C	1-3/8
	D	1-3/4
	E	2
4	B	1
	C	1-3/8
	D	1-3/4
	E	2
	F	2-1/2
5	B	1
	C	1-3/8
	D	1-3/4
	E	2
	F	2-1/2
6	C	1-3/8
	D	1-3/4
	E	2
	F	2-1/2
7	C	1-3/8
	D	1-3/4
	E	2
	F	2-1/2
8	C	1-3/8
	D	1-3/4
	E	2
	F	2-1/2
10	D	1-3/4
	E	2
	F	2-1/2
12	E	2
	F	2-1/2

Notes

+ Head cushion not availale on these bore and piston rod combinations.

Additional rod sizes available upon request.

Dimensions for thread sizes available on following pages.

Port and Cushion Adjustment Positions

(As viewed from rod end: Port standard position 1, Cushion Adjustment standard position 2.)

NOTE: A Port and a Cushion Adjustment cannot be in the same position.

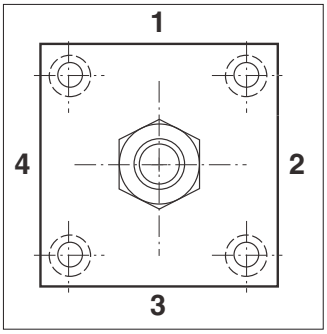

NFPA Aluminum & Steel Cylinders

NFPA Series A Aluminum & J Steel Cylinders

1-1/2 to 12 inch bore size

A, EA, J, and EJ Standard and special cylinder options

Option Code	Description
A(–)	Stroke adjustment single piston (specify adjustment length)
AA(–)	Stroke adjustment double piston (specify adjustment length)
AN	Acorn tie rod nuts (stainless steel)
AP	Air/Oil piston (piston supplied with O-ring hooded U-cup on cap end for air/oil operation)
BL	Removable piston rod stud (installed with removable adhesive sealant)
EN**	Electroless nickel plated cylinder
EV(– –)	Pneulectric stroke signal valve(s): EV(Head Cap) (specify position)
FG	Black fiberglass cylinder tube
H	Piston rod seals O-ring loaded U-cups – (A & J Only)
HR	Case hardened piston rod
L(– –)	Non-standard port location position 1 standard: L (Head Cap) (specify position 1 thru 4 for head and/or cap)
LD	Rodlock with manual release
LE	Rodlock
LF	Low friction cylinder (Nitrile compounded with Teflon® rod and piston seals) (Not available with Ecology series)
MS	Metal scraper
N(– –)	Cushion adjust screw location position 2 standard:N(Head Cap) (specify position 1 thru 4 for head and/or cap)
P(–)	Non-standard port sizes – [specify port size for P(–H) head only, P(–C) cap only, or P(–) both head & cap]
PP	Seals in cylinder O-ring loaded U-cups (rod and piston seals) – (A & J Only)
PN	Pinned piston and rod assembly
PS	Magnetic piston modification
RS	Studded male piston rod end
RX(–)	Piston rod extension over standard (specify additional “C” length)
S	303/304 Stainless steel tie rods & nuts
SB	Stainless steel rod bushing nut
SC†	Single acting spring extend cap end of cylinder
SL	Steel cylinder tubing
SR†	Single acting spring retract rod end of cylinder
SS	303 Stainless steel piston rod
ST(–C)	Stop tube on cap end (C) of cylinder: ST (stop tube length C)
ST(–R)	Stop tube on rod end (R) of cylinder: ST (stop tube length R)
SV(– –)	Stroke signal valve(s): SV (head cap)
T(–)	Non-standard piston rod thread (specify thread)
TF(–)	Piston rod thread depth over standard (Female) (specify additional “A” length)
TS	Stainless cylinder tubing
TX(–)	Piston rod thread extension over standard (Male) (specify additional “A” length)
UB*	Head and cap bumpers (Adds 1/4" per bumper to overall length)
UC*	Cap bumper (Adds 1/4" per bumper to overall length)
UH*	Head bumper (Adds 1/4" per bumper to overall length)
V	Viton® seals in cylinder
XI(–)	Type #10 trunnion set dimension (MT4 model only) (customer must specify length)

†Standard available for 11/2", 2", 2-1/2" bores, 12" max stroke. (Stroke length doubles – 24" max); 12 lbs. force preload, 30 lbs. force compressed. Cushions not available on spring end. For other spring forces, bore sizes or longer strokes, consult factory.

*UA Unit Air Assembly

** When ordering “EN” option specify S, SS, TS, and SB options.

Consult Factory for These Options:

Option Code	Description
AS	Airsaver stroke adjustment
BB	Cylinders mounted back to back
CT	Close tolerance on cylinder stroke
LA	Low friction cylinder (Pak-LapTM style seals)
NI	Nituff® coated cylinder
NS	No silicone used in cylinder assembly
OE	Zero stroke/pneulectric stroke signal valve(s)
OV	Zero stroke/stroke signal valve(s)
RB	Rod boot over piston rod
TE	Nituff® coated cylinder tubing
TK	Thrust key plate mounting – [01 (MS4), 09 (MS2), and 15 (MS7)
VM	Valve mounting only

NORGREN ENGINEERING ADVANTAGE

NFPA Aluminum & Steel Cylinders

NFPA (MX0) 05 Basic Mount

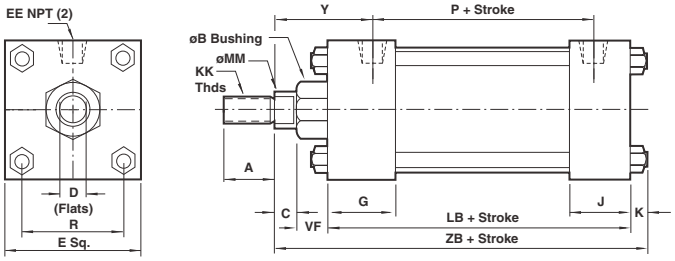

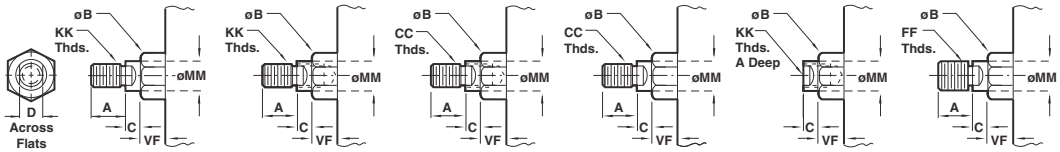

Type 1 Solid (Small Male) | Type 1 Studded (Studded Male Optional) | Type 2 Studded (Intermediate Thread Male Optional) | Type 2 Solid (Intermediate Thread Male Optional) | Type 3 Female (Optional) | Type 6 Solid (Full Thread Male Optional)

Bore		1-1/2"	2"	2-1/2"	3-1/4"	4"	5"	6"	7"	8"	10"	12"
ø Rod	Std.	5/8"	5/8"	5/8"	1"	1"	1"	1-3/8"	1-3/8"	1-3/8"	1-3/4"	2"
MM	O.S.	1"	1"	1"	1-3/8"	1-3/8"	1-3/8"	1-3/4"	1-3/4"	1-3/4"	2"	2-1/2"
A	Std.	.750	.750	.750	1.125	1.125	1.125	1.625	1.625	1.625	2.000	2.250
	O.S.	1.125	1.125	1.125	1.625	1.625	1.625	2.000	2.000	2.000	2.250	3.000
B +.000	Std.	1.124	1.124	1.124	1.499	1.499	1.499	1.999	1.999	1.999	2.374	2.624
-.002	O.S.	1.499	1.499	1.499	1.999	1.999	1.999	2.374	2.374	2.374	2.624	3.124
C	Std.	.375	.375	.375	.500	.500	.500	.625	.625	.625	.750	.875
	O.S.	.500	.500	.500	.625	.625	.625	.750	.750	.750	.875	1.000
CC	Std.	1/2 – 20	1/2 – 20	1/2 – 20	7/8 – 14	7/8 – 14	7/8 – 14	1-1/4-12	1-1/4-12	1-1/4-12	1-1/2-12	1-3/4-12
	O.S.	7/8 – 14	7/8 – 14	7/8 – 14	1-1/4-12	1-1/4-12	1-1/4-12	1-1/2-12	1-1/2-12	1-1/2-12	1-3/4-12	2-1/4-12
D	Std.	.500	.500	.500	.813	.813	.813	1.125	1.125	1.125	1.500	1.688
	O.S.	.813	.813	.813	1.125	1.125	1.125	1.500	1.500	1.500	1.688	2.063
E		2.000	2.500	3.000	3.750	4.500	5.500	6.500	7.500	8.500	10.625	12.750
EE		.375	.375	.375	.500	.500	.500	.750	.750	.750	1.000	1.000
FF	Std.	5/8-18	5/8-18	5/8-18	1 – 14	1 – 14	1 – 14	1-3/8-12	1-3/8-12	1-3/8-12	1-3/4-12	2-12
	O.S.	1 – 14	1 – 14	1 – 14	1-3/8-12	1-3/8-12	1-3/8-12	1-3/4-12	1-3/4-12	1-3/4-12	2-12	2-1/2-12
G		1.500	1.500	1.500	1.750	1.750	1.750	2.000	2.000	2.000	2.250	2.250
J		1.000	1.000	1.000	1.250	1.250	1.250	1.500	1.500	1.500	2.000	2.000
K		.250	.313	.313	.375	.375	.438	.438	.563	.563	.688	.688
KK	Std.	7/16 – 20	7/16 – 20	7/16 – 20	3/4 – 16	3/4 – 16	3/4 – 16	1 – 14	1 – 14	1 – 14	1-1/4 – 12	1-1/2 – 12
	O.S.	3/4 – 16	3/4 – 16	3/4 – 16	1 – 14	1 – 14	1 – 14	1-1/4 – 12	1-1/4 – 12	1-1/4 – 12	1-1/2 – 12	1-7/8 – 12
LB		3.625	3.625	3.750	4.250	4.250	4.500	5.000	5.125	5.125	6.375	6.875
P		2.340	2.340	2.470	2.690	2.690	2.940	3.125	3.250	3.250	4.125	4.625
R		1.428	1.838	2.192	2.758	3.323	4.101	4.87	5.730	6.442	8.004	9.4069
VF	Std.	.625	.625	.625	.875	.875	.875	1.000	1.000	1.000	1.125	1.125
	O.S.	.875	.875	.875	1.000	1.000	1.000	1.125	1.125	1.125	1.125	1.250
Y	Std.	1.840	1.840	1.840	2.380	2.380	2.380	2.813	2.813	2.813	3.125	3.250
	O.S.	2.220	2.220	2.220	2.630	2.630	2.630	3.063	3.063	3.063	3.250	3.500
ZB	Std.	4.875	4.938	5.063	6.000	6.000	6.313	7.063	7.313	7.313	8.938	9.563
	O.S.	5.250	5.313	5.438	6.250	6.250	6.563	7.313	7.563	7.563	9.063	9.813

All dimensions ± .015 unless otherwise noted.

NFPA (MS4) 01 Side Tapped Mount

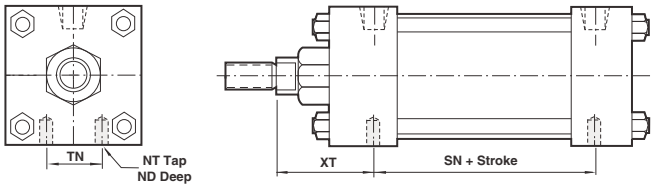

Bore		1-1/2"	2"	2-1/2"	3-1/4"	4"	5"	6"	7"	8"	10"	12"
ND		.375	.375	.500	.750	.750	.938	1.125	1.125	1.125	1.500	1.500
NT		1/4 – 20	5/16 – 18	3/8 – 16	1/2 – 13	1/2 – 13	5/8 – 11	3/4 – 10	3/4 – 10	3/4 – 10	1 – 8	1 – 8
SN		2.250	2.250	2.375	2.625	2.625	2.875	3.125	3.250	3.250	4.125	4.625
TN		.625	.875	1.250	1.500	2.063	2.688	3.250	3.500	4.500	5.500	7.250
XT	Std.	1.938	1.938	1.938	2.438	2.438	2.438	2.813	2.813	2.813	3.125	3.250
	O.S.	2.313	2.313	2.313	2.688	2.688	2.688	3.063	3.063	3.063	3.250	3.500

All dimensions ± .015 unless otherwise noted.

NFPA Aluminum & Steel Cylinders

NFPA (MF1) 03 Head Rectangular Flange Mount

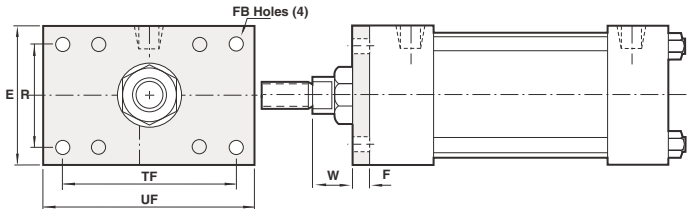

Bore		1-1/2"	2"	2-1/2"	3-1/4"	4"	5"	6"
E		2.000	2.500	3.000	3.750	4.500	5.500	6.500
F		.375	.375	.375	.625	.625	.625	.750
FB		.313	.375	.375	.438	.438	.563	.563
R		1.428	1.838	2.192	2.758	3.323	4.101	4.879
TF		2.750	3.375	3.875	4.688	5.438	6.625	7.625
UF		3.375	4.125	4.625	5.500	6.250	7.625	8.625
W	Std.	.625	.625	.625	.750	.750	.750	.875
	O.S.	1.000	1.000	1.000	1.000	1.000	1.000	1.125

All dimensions ± .015 unless otherwise noted.

NFPA (MF2) 04 Cap Rectangular Flange Mount

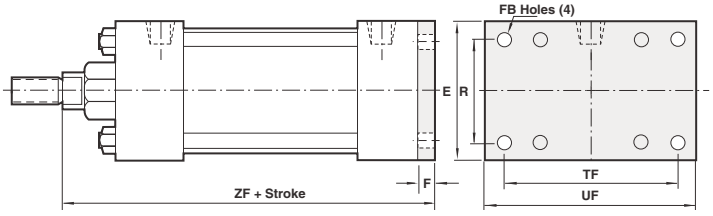

Bore		1-1/2"	2"	2-1/2"	3-1/4"	4"	5"	6"
E		2.000	2.500	3.000	3.750	4.500	5.500	6.500
F		.375	.375	.375	.625	.625	.625	.750
R		1.428	1.838	2.192	2.758	3.323	4.101	4.879
TF		2.750	3.375	3.875	4.687	5.438	6.625	7.625
UF		3.375	4.125	4.625	5.500	6.250	7.625	8.625
ZF	Std.	5.000	5.000	5.125	6.250	6.250	6.500	7.375
	O.S.	5.375	5.375	5.500	6.500	6.500	6.750	7.625

All dimensions ± .015 unless otherwise noted.

NFPA (ME3) 03 Head Square Mount

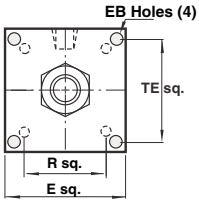

Bore	7"	8"	10"	12"
E	7.500	8.500	10.625	12.750
EB	.563	.688	.813	.813
R	5.730	6.442	8.004	9.406
TE	6.750	7.570	9.406	11.109

All dimensions ± .015 unless otherwise noted.

NFPA (ME4) 04 Cap Square Mount

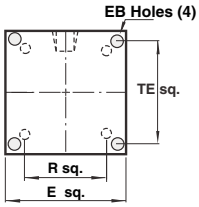

Bore	7"	8"	10"	12"
E	7.500	8.500	10.625	12.750
EB	.563	.688	.813	.813
R	5.730	6.442	8.004	9.406
TE	6.750	7.570	9.406	11.109

All dimensions ± .015 unless otherwise noted.

NFPA (MX1) 06 (4) Extended Tie Rods Both Ends Mount
NFPA (MX2) 6C Cap Tie Rods Extended Mount
NFPA (MX3) 6R Head Tie Rods Extended Mount
NFPA (MX4) 6B (2) Extended Tie Rods Both Ends Mount

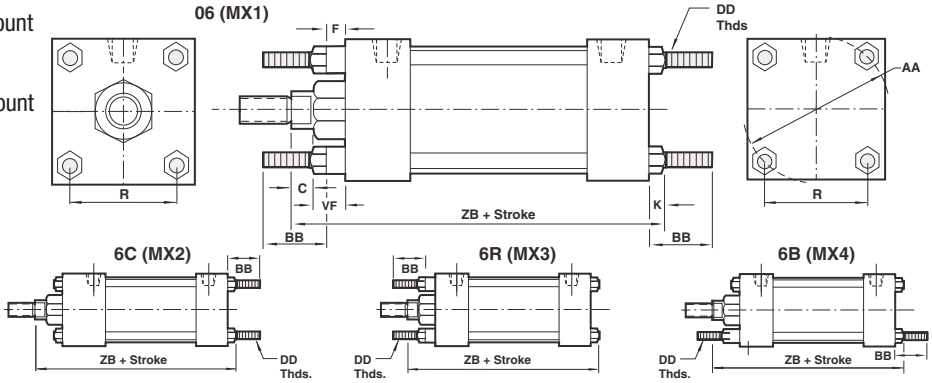

Bore		1-1/2"	2"	2-1/2"	3-1/4"	4"	5"	6"	7"	8"	10"	12"
AA		2.020	2.600	3.100	3.900	4.700	5.800	6.900	8.100	9.100	11.313	13.313
BB		1.000	1.125	1.125	1.375	1.375	1.813	1.813	2.313	2.313	2.688	2.688
C	Std.	.375	.375	.375	.500	.500	.500	.625	.625	.625	.750	.875
	O.S.	.500	.500	.500	.625	.625	.625	.750	.625	.750	.875	1.000
DD		1/4 – 28	5/16 – 24	5/16 – 24	3/8 – 24	3/8 – 24	1/2 – 20	1/2 – 20	5/8 – 18	5/8 – 18	3/4 – 16	3/4 – 16
F		.375	.375	.375	.625	.625	.625	.750	—	—	—	—
K		.250	.313	.313	.375	.375	.438	.438	.563	.563	.688	.688
R		1.428	1.838	2.192	2.758	3.323	4.101	4.879	5.730	6.442	8.004	9.406
VF	Std.	.625	.625	.625	.875	.875	.875	1.000	1.000	1.000	1.125	1.125
	O.S.	.875	.875	.875	1.000	1.000	1.000	1.125	1.125	1.125	1.125	1.250
ZB	Std.	4.875	4.938	5.063	6.000	6.000	6.313	7.063	7.313	7.313	8.938	9.563
	O.S.	5.250	5.313	5.438	6.250	6.250	6.563	7.313	7.563	7.563	9.063	9.813

All dimensions ± .015 unless otherwise noted.

NORGREN ENGINEERING ADVANTAGE

NFPA Aluminum & Steel Cylinders

NFPA (MT1) 7R & 07 Head Trunnion Mount

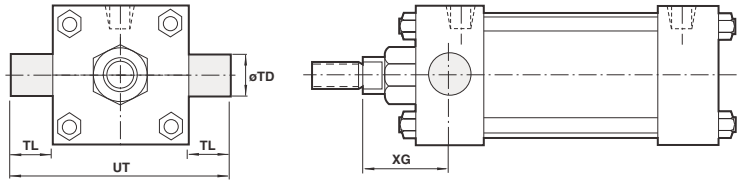

Bore		1-1/2"	2"	2-1/2"	3-1/4"	4"	5"	6"	7"	8"	10"	12"
TD +.000 -.001		1.000	1.000	1.000	1.000	1.000	1.000	1.375	1.375	1.375	1.750	1.750
TL		1.000	1.000	1.000	1.000	1.000	1.000	1.375	1.375	1.375	1.750	1.750
UT		4.000	4.500	5.000	5.750	6.500	7.500	9.250	10.250	11.250	14.125	16.250
XG	Std.	1.750	1.750	1.750	2.250	2.250	2.250	2.625	2.625	2.625	3.000	3.125
	O.S.	2.125	2.125	2.125	2.500	2.500	2.500	2.875	2.875	2.875	3.125	3.375

All dimensions ± .015 unless otherwise noted.

NFPA (MT2) 8R & 08 Cap Trunnion Mount

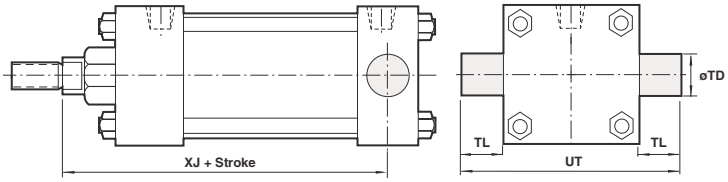

Bore		1-1/2"	2"	2-1/2"	3-1/4"	4"	5"	6"	7"	8"	10"	12"
TD +.000 -.001		1.000	1.000	1.000	1.000	1.000	1.000	1.375	1.375	1.375	1.750	1.750
TL		1.000	1.000	1.000	1.000	1.000	1.000	1.375	1.375	1.375	1.750	1.750
UT		4.000	4.500	5.000	5.750	6.500	7.500	9.250	10.250	11.250	14.125	16.250
XJ	Std.	4.125	4.125	4.250	5.000	5.000	5.250	5.875	6.000	6.000	7.250	7.875
	O.S.	4.500	4.500	4.625	5.250	5.250	5.500	6.125	6.250	6.250	7.375	8.125

All dimensions ± .015 unless otherwise noted.

NFPA (MS2) 09 Side Lug Mount

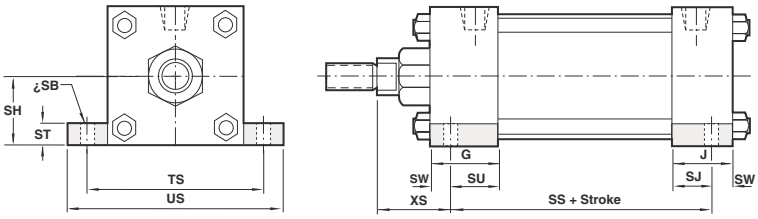

Bore		1-1/2"	2"	2-1/2"	3-1/4"	4"	5"	6"	7"	8"	10"	12"
G		1.500	1.500	1.500	1.750	1.750	1.750	2.000	2.000	2.000	2.250	2.250
J		1.000	1.000	1.000	1.250	1.250	1.250	1.500	1.500	1.500	2.000	2.000
SB		.438	.438	.438	.563	.563	.813	.813	.813	.813	1.063	1.063
SH		1.000	1.250	1.500	1.875	2.250	2.750	3.250	3.750	4.250	5.313	6.375
SJ		.625	.625	.625	.750	.750	.813	.813	.813	.813	2.000	2.000
SS		2.875	2.875	3.000	3.250	3.250	3.125	3.625	3.750	3.750	4.625	5.125
ST		.500	.500	.500	.750	.750	1.000	1.000	1.000	1.000	1.250	1.250
SU		1.125	1.125	1.125	1.250	1.250	1.063	1.563	1.563	1.563	2.000	2.000
SW		.375	.375	.375	.500	.500	.688	.688	.688	.688	.875	.875
TS		2.750	3.250	3.750	4.750	5.500	6.875	7.875	8.875	9.875	12.375	14.500
US		3.500	4.000	4.500	5.750	6.500	8.250	9.250	10.250	11.250	14.125	16.250
XS	Std.	1.375	1.375	1.375	1.875	1.875	2.062	2.313	2.313	2.313	2.750	2.875
	O.S.	1.750	1.750	1.750	2.125	2.125	2.313	2.562	2.563	2.563	2.875	3.125

All dimensions ± .015 unless otherwise noted.

Norgren.com/usa – 303.794.2611 – help@amer.norgren.com

NFPA Aluminum & Steel Cylinders

NFPA (MT4) 10 Center Trunnion Mount

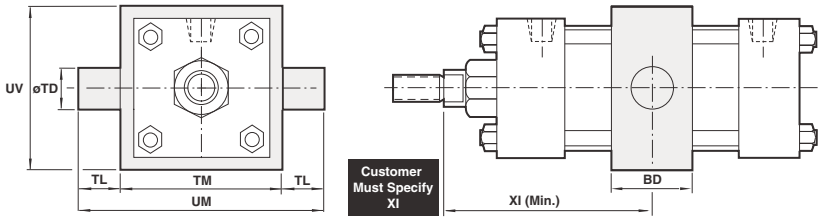

Bore		1-1/2"	2"	2-1/2"	3-1/4"	4"	5"	6"	7"	8"	10"	12"
BD		1.250	1.500	1.500	2.000	2.000	2.000	2.500	2.500	2.500	3.000	3.000
TD +.000 -.001		1.000	1.000	1.000	1.000	1.000	1.000	1.375	1.375	1.375	1.750	1.750
TL		1.000	1.000	1.000	1.000	1.000	1.000	1.375	1.375	1.375	1.750	1.750
TM		2.500	3.000	3.500	4.500	5.250	6.250	7.625	8.750	9.750	12.000	14.000
UM		4.500	5.000	5.500	6.500	7.250	8.250	10.375	11.500	12.500	15.500	17.500
UV		2.500	3.000	3.500	4.250	5.000	6.000	7.000	8.500	9.500	11.750	13.750
XI min.	Std.	3.125	3.250	3.250	4.125	4.125	4.125	4.625	4.875	4.875	5.625	5.750
	O.S.	3.500	3.625	3.625	4.375	4.375	4.375	4.875	5.125	5.125	5.750	6.000

All dimensions ± .015 unless otherwise noted.

NFPA (MS1) 11 Side End Angle Mount

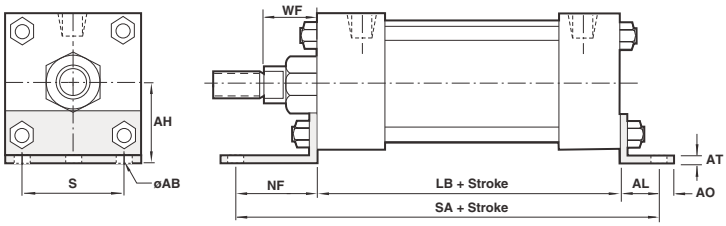

Bore		1-1/2"	2"	2-1/2"	3-1/4"	4"	5"	6"	7"	8"	10"	12"
AB		.438	.438	.438	.563	.563	.688	.813	.813	.813	1.063	1.063
AH		1.188	1.438	1.625	1.938	2.250	2.750	3.250	3.750	4.250	5.313	6.375
AL		1.000	1.000	1.000	1.250	1.250	1.375	1.375	1.813	1.813	2.125	2.125
AO		.375	.375	.375	.500	.500	.625	.625	.688	.688	.875	.875
AT		.125	.125	.125	.125	.125	.187	.187	.250	.250	.250	.250
LB		3.625	3.625	3.750	4.250	4.250	4.500	5.000	5.125	5.125	6.375	6.875
NF		1.375	1.375	1.375	1.875	1.875	2.000	2.125	1.813	1.813	1.813	1.813
S		1.250	1.750	2.250	2.750	3.500	4.250	5.250	6.125	7.125	8.875	11.000
SA		6.000	6.000	6.125	7.375	7.375	7.875	8.500	8.750	8.750	10.625	11.125
WF	STD.	1.000	1.000	1.000	1.375	1.375	1.375	1.625	1.625	1.625	1.875	2.000
	O.S.	1.375	1.375	1.375	1.625	1.625	1.625	1.875	1.875	1.875	2.000	2.250

All dimensions ± .015 unless otherwise noted.

NFPA (MP1) 12 Cap Fixed Clevis Mount

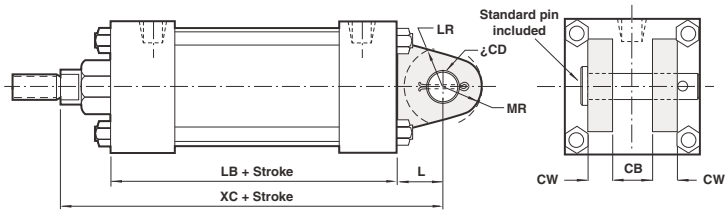

Bore		1-1/2"	2"	2-1/2"	3-1/4"	4"	5"	6"	7"	8"	10"	12"
CB		.750	.750	.750	1.250	1.250	1.250	1.500	1.500	1.500	2.000	2.500
CD		.500	.500	.500	.750	.750	.750	1.000	1.000	1.000	1.375	1.750
CW		.500	.500	.500	.625	.625	.625	.750	.750	.750	1.000	1.250
L		.750	.750	.750	1.250	1.250	1.250	1.500	1.500	1.500	2.125	2.250
LB		3.625	3.625	3.750	4.250	4.250	4.500	5.000	5.125	5.125	6.375	6.875
LR		.750	.750	.750	1.250	1.250	1.250	1.500	1.500	1.500	1.875	2.125
MR		.625	.625	.625	.938	.938	.938	1.188	1.188	1.188	1.625	2.125
XC	Std.	5.375	5.375	5.500	6.875	6.875	7.125	8.125	8.250	8.250	10.375	11.125
	O.S.	5.750	5.750	5.875	7.125	7.125	7.375	8.375	8.500	8.500	10.500	11.375

All dimensions ± .015 unless otherwise noted.

NORGREN ENGINEERING ADVANTAGE

NFPA Aluminum & Steel Cylinders

All dimensions ± .015 unless otherwise noted.

NFPA (MS7) 15 End Lug Mount

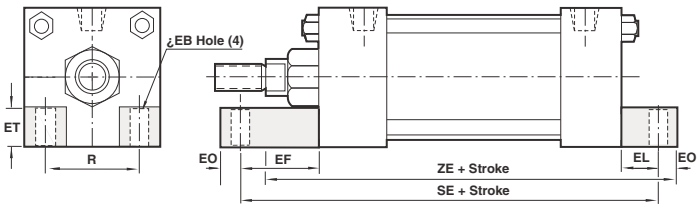

Bore		1-1/2"	2"	2-1/2"	3-1/4"	4"	5"	6"	7"	8"
EB		.313	.375	.375	.438	.438	.563	.563	.688	.688
EF		1.125	1.313	1.438	1.500	1.625	1.688	1.750	1.750	1.750
EL		.750	.938	1.063	.875	1.000	1.063	1.000	1.125	1.125
EO		.250	.313	.313	.375	.375	.500	.500	.625	.625
ET		.500	.750	.750	1.000	1.250	1.500	1.500	1.750	2.063
R		1.428	1.838	2.192	2.758	3.323	4.101	4.879	5.730	6.442
SE		5.500	5.875	6.250	6.625	6.875	7.250	7.750	7.375	7.375
ZE	Std.	5.625	5.875	6.125	6.875	7.000	7.438	8.125	8.500	8.500
	O.S.	6.000	6.250	6.500	7.125	7.250	7.688	8.375	8.750	8.750

16 Sleeve Nut Construction Side Tapped (Universal Mount)

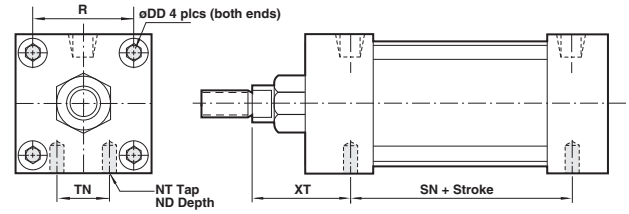

Bore		1-1/2"	2"	2-1/2"	3-1/4"	4"	5"	6"
DD		1/4-28	5/16-24	5/16-24	3/8-24	3/8-24	1/2-20	1/2-20
NT		1/4 – 20	5/16 – 18	3/8 – 16	1/2 – 13	1/2 – 13	5/8 – 11	3/4 – 10
ND		.375	.375	.500	.750	.750	.938	1.125
R		1.428	1.838	2.192	2.758	3.323	4.101	4.879
SN		2.250	2.250	2.375	2.625	2.625	2.875	3.125
TN		.625	.875	1.250	1.500	2.063	2.688	3.250
XT	Std.	1.938	1.938	1.938	2.438	2.438	2.438	2.813
	O.S.	2.313	2.313	2.313	2.688	2.688	2.688	3.063

NFPA (MF5) 20 Head Square Flange Mount

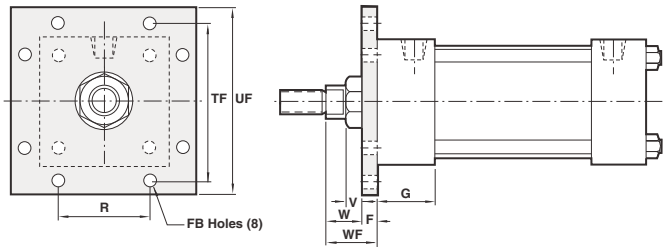

Bore		1-1/2"	2"	2-1/2"	3-1/4"	4"	5"	6"
F		.375	.375	.375	.625	.625	.625	.750
FB		.313	.375	.375	.438	.438	.563	.563
G		1.500	1.500	1.500	1.750	1.750	1.750	2.000
R		1.428	1.838	2.192	2.758	3.323	4.101	4.879
TF		2.750	3.375	3.875	4.688	5.438	6.625	7.625
UF		3.375	4.125	4.625	5.500	6.250	7.625	8.625
V	Std.	.250	.250	.250	.250	.250	.250	.250
	O.S.	.500	.500	.500	.375	.375	.375	.375
W	Std.	.625	.625	.625	.750	.750	.750	.875
	O.S.	1.000	1.000	1.000	1.000	1.000	1.000	1.125
WF	Std.	1.000	1.000	1.000	1.375	1.375	1.375	1.625
	O.S.	1.375	1.375	1.375	1.625	1.625	1.625	1.875

NFPA (MF6) 21 Cap Square Flange Mount

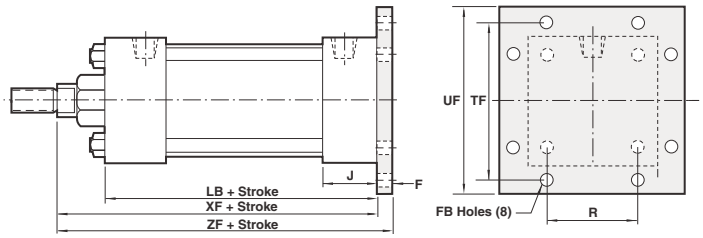

Bore		1-1/2"	2"	2-1/2"	3-1/4"	4"	5"	6"
F		.375	.375	.375	.625	.625	.625	.750
FB		.313	.375	.375	.438	.438	.563	.563
J		1.000	1.000	1.000	1.250	1.250	1.250	1.500
LB		3.625	3.625	3.750	4.250	4.250	4.500	5.000
R		1.428	1.838	2.192	2.758	3.323	4.101	4.879
TF		2.750	3.375	3.875	4.688	5.438	6.625	7.625
UF		3.375	4.125	4.625	5.500	6.250	7.625	8.625
XF	Std.	4.625	4.625	4.750	5.625	5.625	5.875	6.625
	O.S.	5.000	5.000	5.125	5.875	5.875	6.125	6.875
ZF	Std.	5.000	5.000	5.125	6.250	6.250	6.500	7.375
	O.S.	5.375	5.375	5.500	6.500	6.500	6.750	7.625

NFPA (MP2) 22 Detachable Cap Clevis Mount

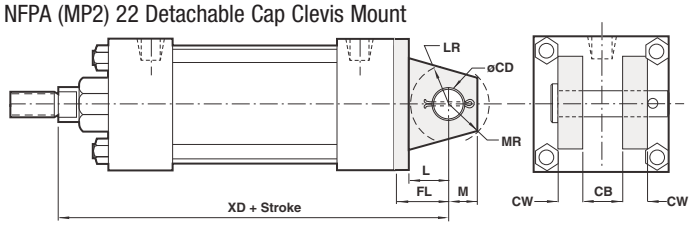

Bore		1-1/2"	2"	2-1/2"	3-1/4"	4"	5"	6"	7"	8"
CB		.750	.750	.750	1.250	1.250	1.250	1.500	1.500	1.500
CD		.500	.500	.500	.750	.750	.750	1.000	1.000	1.000
CW		.500	.500	.500	.625	.625	.625	.750	.750	.750
FL		1.125	1.125	1.125	1.875	1.875	1.875	2.250	2.250	2.250
L		.750	.750	.750	1.250	1.250	1.250	1.500	1.500	1.500
LR		.750	.750	.750	1.250	1.250	1.250	1.500	1.500	1.500
M		.500	.500	.500	.750	.750	.750	1.000	1.000	1.000
MR		.625	.625	.625	.938	.938	.938	1.188	1.188	1.188
XD	Std.	5.750	5.750	5.875	7.500	7.500	7.750	8.875	9.000	9.000
	O.S.	6.125	6.125	6.250	7.750	7.750	8.000	9.125	9.250	9.250

NFPA (MP4) 42 Detachable Cap Eye Mount

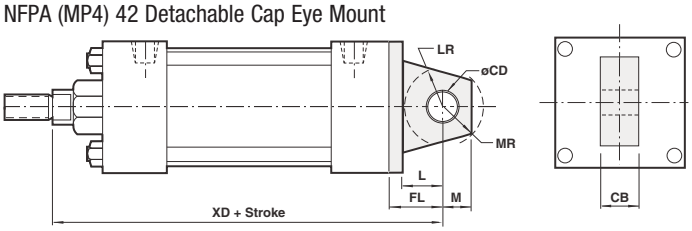

Bore		1-1/2"	2"	2-1/2"	3-1/4"	4"	5"	6"	7"	8"
CB		.750	.750	.750	1.250	1.250	1.250	1.500	1.500	1.500
CD		.500	.500	.500	.750	.750	.750	1.000	1.000	1.000
FL		1.125	1.125	1.125	1.875	1.875	1.875	2.250	2.250	2.250
L		.750	.750	.750	1.250	1.250	1.250	1.500	1.500	1.500
LR		.750	.750	.750	1.250	1.250	1.250	1.500	1.500	1.500
M		.500	.500	.500	.750	.750	.750	1.000	1.000	1.000
MR		.625	.625	.625	.938	.938	.938	1.188	1.188	1.188
XD	Std.	5.750	5.750	5.875	7.500	7.500	7.750	8.875	9.000	9.000
	O.S.	6.125	6.125	6.250	7.750	7.750	8.000	9.125	9.250	9.250

Norgren.com/usa – 303.794.2611 – help@amer.norgren.com

NFPA Aluminum & Steel Cylinders

NFPA (MP3) 32 Cap Fixed Eye

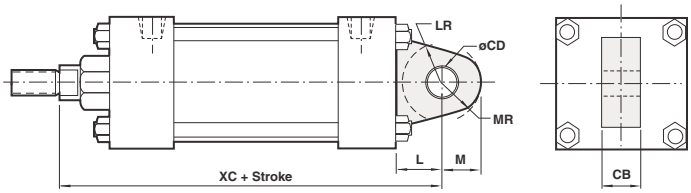

Bore		1-1/2"	2"	2-1/2"	3-1/4"	4"	5"	6"	7"	8"	10"	12"
CB		.750	.750	.750	1.250	1.250	1.250	1.500	1.500	1.500	2.000	2.500
CD		.500	.500	.500	.750	.750	.750	1.000	1.000	1.000	1.375	1.750
L		.750	.750	.750	1.250	1.250	1.250	1.500	1.500	1.500	2.125	2.250
LR		.750	.750	.750	1.250	1.250	1.250	1.500	1.500	1.500	1.875	2.125
M		.500	.500	.500	.750	.750	.750	1.000	1.000	1.000	1.375	1.750
MR		.625	.625	.625	.938	.938	.938	1.188	1.188	1.188	1.625	2.125
XC	Std.	5.375	5.375	5.500	6.875	6.875	7.125	8.125	8.250	8.250	10.375	11.125
	O.S.	5.750	5.750	5.875	7.125	7.125	7.375	8.375	8.500	8.500	10.500	11.375

All dimensions ± .015 unless otherwise noted.

52 (Not NFPA) Spherical Bearing Mount

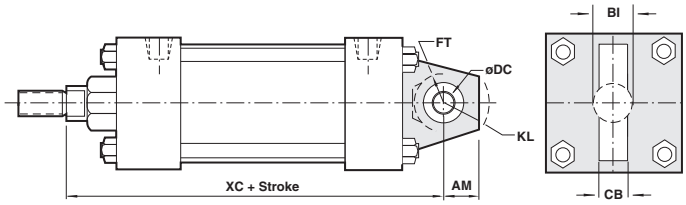

Bore		1-1/2"	2"	2-1/2"	3-1/4"	4"	5"	6"	7"	8"
AM		.750	.750	.750	1.000	1.000	1.000	1.250	1.250	1.250
BI		.438	.438	.438	.656	.656	.656	.875	.875	.875
CB		.375	.375	.375	.562	.562	.562	.75	.75	.75
DC		.500	.500	.500	.750	.750	.750	1.000	1.000	1.000
FT		.625	.625	.625	1.000	1.000	1.000	1.250	1.250	1.250
KL		.969	.969	.969	1.406	1.406	1.406	1.719	1.719	1.719
XC	Std.	5.375	5.375	5.500	6.875	6.875	7.125	8.125	8.250	8.250
	O.S.	5.750	5.750	5.875	7.125	7.125	7.375	8.375	8.500	8.500

All dimensions ± .015 unless otherwise noted.

60 Base (Not NFPA) Bar Mount

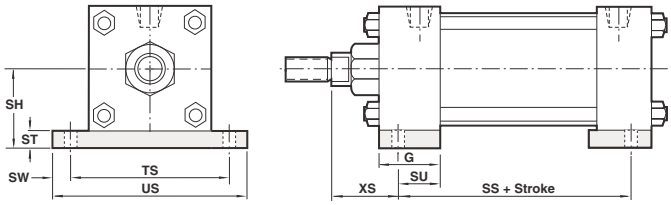

Bore		1-1/2"	2"	2-1/2"	3-1/4"	4"	5"	6"
G		1.500	1.500	1.500	1.750	1.750	1.750	2.000
SH		1.250	1.500	1.875	2.375	2.750	3.500	4.000
SS		2.875	2.875	3.000	3.250	3.250	3.125	3.625
ST		.250	.250	.375	.500	.500	.750	.750
SU		1.125	1.125	1.125	1.250	1.250	1.063	1.313
SW		.375	.375	.375	.500	.500	.688	.688
TS		2.750	3.250	3.750	4.750	5.500	6.875	7.875
US		3.500	4.000	4.500	5.750	6.500	8.250	9.250
XS	Std.	1.375	1.375	1.375	1.875	1.875	2.063	2.313
	O.S.	1.750	1.750	1.750	2.125	2.125	2.313	2.563

All dimensions ± .015 unless otherwise noted.

NFPA (MX0) 05 Basic with Double Rod End Cylinder

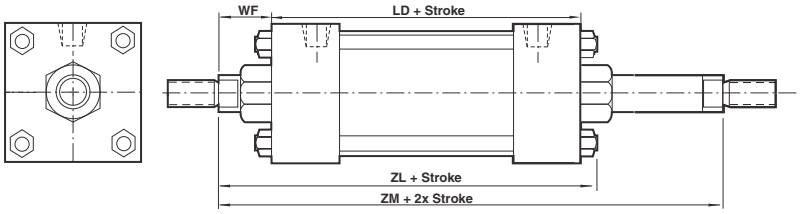

Bore		1-1/2"	2"	2-1/2"	3-1/4"	4"	5"	6"	7"	8"	10"	12"
LD		4.125	4.125	4.250	4.750	4.750	5.000	5.500	5.625	5.625	6.625	7.125
WF	Std.	1.000	1.000	1.000	1.375	1.375	1.375	1.625	1.625	1.625	1.875	2.000
	O.S.	1.375	1.375	1.375	1.625	1.625	1.625	1.875	1.875	1.875	2.000	2.250
ZL	Std.	5.375	5.438	5.563	6.500	6.500	6.813	7.563	7.813	7.813	10.375	11.125
	O.S.	5.750	5.813	5.938	6.750	6.750	7.063	7.813	8.125	8.125	10.625	11.625
ZM	Std.	6.125	6.125	6.250	7.500	7.500	7.750	8.750	8.875	8.875	9.250	9.675
	O.S.	6.875	6.875	7.000	8.000	8.000	8.250	9.250	9.375	9.375	9.375	10.375

All dimensions ± .015 unless otherwise noted.

NFPA Aluminum & Steel Cylinders

All dimensions ± .015 unless otherwise noted.

NFPA Rod Clevis

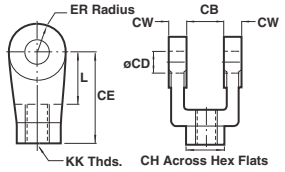

Note: Rod Clevis Assembly 49102A and 49103A are supplied with NFPA Pin. All others are with Standard Pin

Rod Clevis	Rod Clevis Assy.	KK	CB	CD	CE	CH	CW	ER	L
49028	49028A	7/16 – 20	.750	.500	1.500	1.000	.500	.500	.750
49029	49029A	1/2 – 20	.750	.500	1.500	1.000	.500	.500	.750
49097	49097A	5/8 – 18	.750	.500	1.500	1.000	.500	.500	.750
49030	49030A	3/4 – 16	1.250	.750	2.375	1.250	.625	.750	1.250
49098	49098A	7/8 – 14	1.250	.750	2.375	1.250	.625	.750	1.250
49032	49032A	1 – 14	1.500	1.000	3.125	1.500	.750	1.000	1.500
49033	49033A	1-1/4 – 12	2.000	1.375	4.125	2.000	1.000	1.375	2.125
49099	49099A	1-3/8 – 12	2.000	1.375	4.125	2.000	1.000	1.000	2.125
49034	49034A	1-1/2 – 12	2.500	1.750	4.500	2.375	1.250	1.750	2.250
49100	49100A	1-3/4 – 12	2.500	1.750	4.500	2.375	1.250	1.750	2.250
49036	49036A	1-7/8 – 12	2.500	2.000	5.500	2.937	1.250	2.000	2.500
49101	49101A	2 – 12	2.500	2.000	5.500	2.937	1.250	2.000	2.500
49102	49102A	2-1/4 – 12	3.000	2.500	6.500	3.500	1.500	2.750	3.000
49103	49103A	2-1/2 – 12	3.000	3.000	6.750	3.875	1.500	2.750	3.250

Small Rod Clevis & Jam Nut

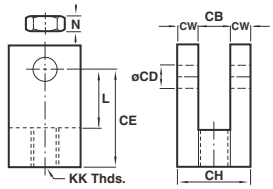

Note: Rod Clevis Assembly is supplied with Jam Nut and Standard Pin.

Rod Clevis	Rod Clevis Assy.	KK	CB	CD	CE	CH	CW	L	N
49218	49218A	1/2 – 20	.500	.500	1.375	1.000	.250	.750	.375
49219	49219A	3/4 – 16	.750	.750	1.750	1.500	.375	1.000	.500

Rod Jam Nut

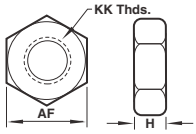

	52025	52026	52027	52010	52029	52030	52085
KK	7/16 – 20	1/2 – 20	5/8 – 18	3/4 – 16	7/8 – 14	1 – 14	1-1/4 – 12
AF	.688	.750	.938	1.125	1.313	1.500	1.875
H	.250	.313	.375	.422	.484	.547	.719
	52092	**52068**	**52082**	**52070**	**52093**	**52083**	**52075**
KK	1-3/8 – 12	1-1/2 – 12	1-3/4 – 12	1-7/8 – 12	2 – 12	2-1/4 – 12	2-1/2 – 12
AF	2.063	2.250	2.625	2.938	3.125	3.500	3.875
H	.781	.844	.969	1.031	1.094	1.203	1.453

NFPA Rod Eye

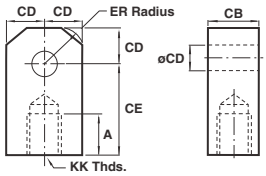

Note: Rod Eye Assembly 49062A and 49096A are supplied with NFPA Pin. All others are supplied with Standard Pin

Rod Eye	Rod Eye Assy.	KK	A	CB	CD	CE	ER
49015	49015A	7/16 – 20	.750	.750	.500	1.500	.563
49014	49014A	1/2 – 20	.750	.750	.500	1.500	.563
49091	49091A	5/8 – 18	.750	1.250	.750	2.063	.500
49013	49013A	3/4 – 16	1.125	1.250	.750	2.063	.938
49092	49092A	7/8 – 14	1.125	1.250	.750	2.063	.750
49011	49011A	1 – 14	1.625	1.500	1.000	2.813	1.125
49010	49010A	1-1/4 – 12	2.000	2.000	1.375	3.438	1.563
49093	49093A	1-3/8 – 12	1.625	2.000	1.375	3.438	1.375
49009	49009A	1-1/2 – 12	2.250	2.500	1.750	4.000	2.500
49094	49094A	1-3/4 – 12	2.250	2.500	1.750	4.000	2.500
49007	49007A	1-7/8 – 12	3.000	2.500	2.000	5.000	2.875
49095	49095A	2 – 12	2.250	2.500	2.000	5.000	2.875
49062	49062A	2-1/4 – 12	3.000	3.000	2.500	5.813	3.250
49096	49096A	2-1/2 – 12	3.000	3.000	3.000	6.125	3.250

Spherical Rod Eye

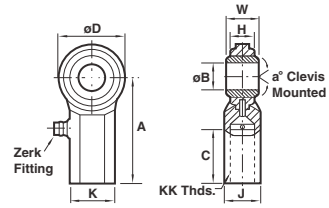

	Spherical Rod Eye Spherical Rod Eye Assy. Bore	49220 49220A 1-1/2, 2 & 2-1/2	49221 49221A 3-1/4, 4 & 5	49222 49222A 6 & 8
KK	UNF-2B	1/2 – 20	3/4 – 16	1 – 14
a°	Misalignment Angle	12	14	14
A	± .015	2.125	2.875	4.125
B	+ .0025 / -.0005	.500	.750	1.000
C	+ .062/ -.031	1.063	1.563	2.125
D	± .010	1.313	1.750	2.750
H	Reference	.453	.593	1.000
J	± .010	.750	1.000	1.500
K	± .010	.875	1.125	1.625
W	+ .000 / -.005	.625	.875	1.375

NFPA Eye Bracket

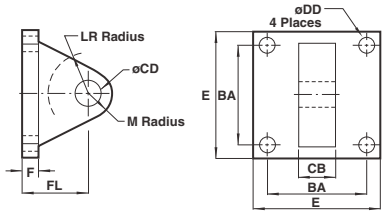

Note: NFPA Eye Bracket Assembly is supplied with Standard Pin.

NFPA Eye Bracket Eye Bracket Assembly	49021 49021A	49020 49020A	49019 49019A	49016 49016A	49017 49017A	49018 49018A
BA	1.625	2.563	3.250	3.813	4.937	5.750
CB	.750	1.250	1.500	2.000	2.500	2.500
CD	.500	.750	1.000	1.375	1.750	2.000
DD	.406	.531	.656	.656	.906	1.026
E	2.500	3.500	4.500	5.000	6.500	7.500
F	.375	.625	.750	.875	.875	1.000
FL	1.125	1.875	2.250	3.000	3.125	3.500
LR	.750	1.250	1.500	2.125	2.250	2.500
M	.500	.750	1.000	1.375	1.750	2.000

Norgren Eye Bracket

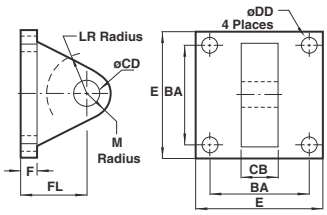

Note: Norgren Eye Bracket Assembly is supplied with Standard Pin.

Eye Bracket Eye Bracket Assembly	49240 49240A	49241 49241A	49242 49242A	49243 49243A	49244 49244A	49019 49019A	49016 49016A	49017 49017A	49018 49018A
BA	1.438	1.844	2.188	2.938	3.563	3.250	3.813	4.950	5.730
CB	.750	.750	.750	1.250	1.250	1.500	2.000	2.500	2.500
CD	.500	.500	.500	.750	.750	1.000	1.375	1.750	2.000
DD	.281	.344	.344	.469	.469	.656	.656	.906	1.062
E	2.000	2.500	3.000	3.750	4.500	4.500	5.000	6.500	7.500
F	.375	.375	.375	.500	.500	.750	.875	.875	1.000
FL	1.125	1.125	1.125	1.750	1.750	2.250	3.000	3.125	3.500
LR	.563	.563	.563	1.000	1.000	1.500	2.125	2.250	2.500
M	.625	.625	.625	.875	.875	1.000	1.375	1.750	2.000

NFPA Aluminum & Steel Cylinders

NFPA Clevis Bracket

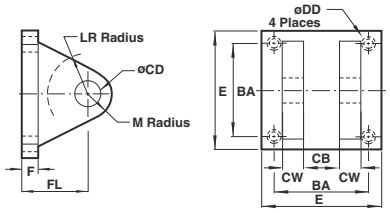

Note: NFPA Clevis Bracket Assembly is supplied with Standard Pin.

NFPA Clevis Bracket	49250	49251	49252
Clevis Bracket Assembly	49250A	49251A	49252A
BA	1.625	2.563	3.250
CB	.750	1.250	1.500
CD	.500	.750	1.000
CW	.500	.625	.750
DD	3/8 – 24	1/2 – 20	5/8 – 18
E	2.500	3.500	4.500
F	.375	.625	.750
FL	1.125	1.875	2.250
LR	.750	1.250	1.500
M	.500	.813	1.000

All dimensions ± .015 unless otherwise noted.

Norgren Clevis Bracket

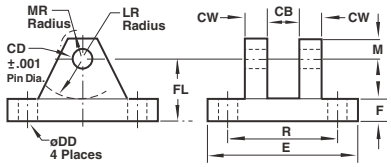

Note: Norgren Clevis Bracket Assembly is supplied with Standard Pin.

Norgren Clevis Bracket	49022	49023	49024	49027	49025	49026
Clevis Bracket Assembly	49022A	49023A	49024A	49027A	49025A	49026A
CB	.750	1.250	1.500	2.000	2.500	2.500
CD	.500	.750	1.000	1.375	1.750	2.000
CW	.500	.625	.750	1.000	1.250	1.500
DD	.406	.531	.656	.656	.906	1.026
E	3.500	5.000	6.500	8.000	10.000	12.000
F	.500	.625	.750	.875	.875	1.000
FL	1.500	1.875	2.250	3.000	3.625	4.520
LR	.750	1.188	1.500	2.000	2.750	3.188
M	.500	.750	1.000	1.375	1.750	2.250
MR	.625	.906	1.250	1.656	2.219	2.781
R	2.547	3.828	4.953	5.734	7.500	9.938

All dimensions ± .015 unless otherwise noted.

NFPA Pin

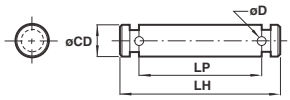

Note: ø.500, .750, 1.000 are Retainer type design ø1.375 and larger are Cotter Pin design.

NFPA Pin	49006-R	49005-R	49004-R	49003	49002	49001	49000	49126	49127
CD.	500	.750	1.000	1.375	1.750	2.000	2.000	2.500	3.000
LH	2.219	3.125	3.750	4.750	5.812	5.812	6.312	6.875	6.875
LP	1.875	2.750	3.250	4.250	5.250	5.281	5.770	6.312	6.344
D	–	–	–	.173	.173	.204	.204	.219	.250

All dimensions ± .015 unless otherwise noted.

Standard Pin

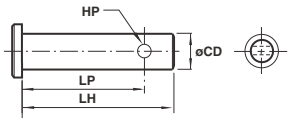

Std. Pin	49207*	49208*	49206	49205	49204	49203	49202	49201
CD	.500	.750	.500	.750	1.000	1.375	1.750	2.000
HP	.156	.156	.156	.156	.203	.250	.250	.250
LH	1.421	2.000	2.250	3.000	3.500	5.000	6.000	6.000
LP	1.266	1.843	2.093	2.843	3.297	4.500	5.500	5.500

All dimensions ± .015 unless otherwise noted.

Rod Alignment Coupler

The Rod Alignment Coupler allows 1/16" of radial float and 2° of spherical movement. This prevents cylinder binding due to misalignment thus extending bearing and seal life, and permits greater tolerance between the centerline of the cylinder and mating part for simplified installation.

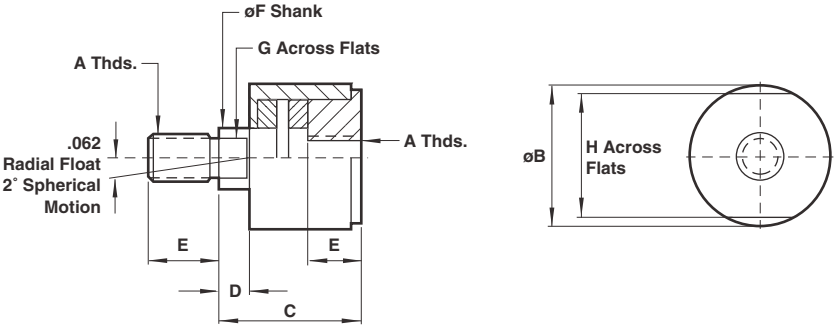

Rod Alignment Coupler Dimensions

	CC-1-07	CC-1-08	CC-1-10	CC-1-12	CC-1-14	CC-1-16	CC-1-20	CC-1-24	CC-1-28
A	7/16 – 20	1/2 – 20	5/8 – 18	3/4 – 16	7/8 – 14	1 – 14	1-1/4 – 12	1- 1/2 – 12	1-3/4 – 12
B	1.250 (31.75)	1.250 (31.75)	1.250 (31.75)	1.750 (44.45)	1.750 (44.45)	2.500 (63.50)	2.500 (63.50)	3.250 (82.50)	3.250 (82.50)
C	2.000 (50.80)	2.000 (50.80)	2.000 (50.80)	2.312 (58.72)	2.312 (58.72)	2.937 (74.60)	2.937 (74.60)	4.375 (111.13)	4.375 (111.13)
D	.500 (12.70)	.500 (12.70)	.500 (12.70)	.500 (12.70)	.500 (12.70)	.500 (12.70)	.500 (12.70)	.812 (20.62)	.812 (20.62)
E	.750 (19.05)	.750 (19.05)	.750 (19.05)	1.125 (28.58)	1.125 (28.58)	1.625 (41.28)	1.625 (41.28)	2.250 (57.15)	2.250 (57.15)
F	.625 (28.58)	.625 (28.58)	.625 (28.58)	.969 (24.61)	.969 (24.61)	1.375 (34.93)	1.375 (34.93)	1.750 (44.45)	1.750 (44.45)
G	.500 (12.70)	.500 (12.70)	.500 (12.70)	.812 (20.62)	.812 (20.62)	1.156 (29.36)	1.156 (29.36)	1.500 (38.10)	1.500 (38.10)
H	1.125 (28.58)	1.125 (28.58)	1.125 (28.58)	1.500 (38.10)	1.500 (38.10)	2.250 (57.15)	2.250 (57.15)	3.000 (76.20)	3.000 (76.20)
Max Pull (lbs.)	10,000	14,000	19,000	34,000	39,000	64,000	78,000	134,000	134,000

NFPA Aluminum & Steel Cylinders

Air-Oil Tank

Available in 5 practical bore sizes: 1-1/8", 2", 3-1/4", 5", and 8", the Air-Oil Tank includes a translucent fiberglass tube which permits viewing of the tank oil level from any position, internal baffles that reduce foaming and aeration of the system oil resulting in maximum cylinder control, and standard angle mounting brackets (except 1-1/8" bore) easily removed for convenient fluid port positioning.

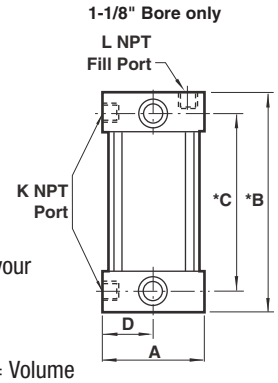

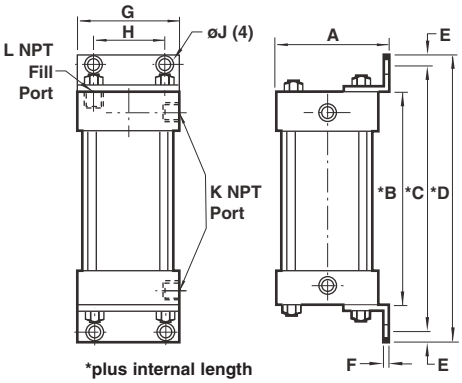

How to Figure Length of Volume

Use these equations to select the right air/oil tank volume for your particular application.

Volume of Cylinder:

- Cap End Cylinder Bore Area x Stroke = Volume
- Head End Cylinder Bore Area – (Piston Rod Area) x Stroke = Volume

Length of Tank = $\frac{\text{Volume of Cylinder x 1.3*}}{\text{Tank Bore Area}}$

(See chart below.) *30% minimum recommended reserve working volume.

Final Length of Volume of Tank = Working length of tank + 2" minimum safety factor to prevent aeration of oil. Note: Length must be at least 3".

Air-Oil Tank Dimensions

Bore	1-1/8" AOT-225		2" AOT-04		3-1/4" AOT-065		5" AOT-10		8 AOT-16	
A	1.500	(38.10)	2.687	(68.25)	4.000	(101.60)	5.625	(142.88)	8.625	(219.08)
B	1.250	(31.75)	2.000	(50.80)	2.500	(63.50)	2.500	(63.50)	3.000	(76.20)
C	.750	(19.05)	4.000	(101.60)	5.000	(127.00)	5.250	(127.00)	6.625	(168.28)
D	.750	(19.05)	4.750	(120.65)	6.000	(152.40)	6.500	(152.40)	8.000	(203.20)
E			.375	(9.53)	.500	(12.70)	.500	(12.70)	.687	(17.45)
F			.125	(3.18)	.187	(4.75)	.187	(4.75)	.250	(6.35)
G			2.500	(63.50)	3.750	(95.25)	5.500	(139.70)	8.500	(215.90)
H			1.750	(44.45)	2.750	(69.85)	4.25	(107.95)	7.125	(180.98)
øJ			.437	(11.10)	.562	(14.27)	.690	(17.53)	.812	(20.62)
K	.125	(3.18)	.375	(9.53)	.500	(12.70)	.500	(12.70)	.750	(19.05)
L	.125	(3.18)	.250	(6.35)	.375	(9.53)	.375	(9.53)	.500	(12.70)

Note: Maximum operating pressure 250 PSI.

Air-Oil Tank Volumes (cubic inches)

Internal Length of Tank / Bore Area	1-1/8" .995 sq."	2" 3.14 sq."	3-1/4" 8.30 sq."	5" 19.64 sq."	8" 50.26 sq."
6"	5.9	18.6	49.8	117.8	301.5
8"	7.9	25.1	66.4	157.1	402.0
10"	9.9	31.4	83.0	196.4	502.6
12"	11.9	37.6	99.6	235.6	603.1
14"	13.9	43.9	116.2	274.9	703.6
16"	15.9	50.2	132.8	314.2	804.1
18"	17.9	56.5	149.4	353.5	904.5
20"	19.9	62.8	166.0	392.8	1005.2

How to Order: Specify air-oil tank part number and internal length.

Example: 2" bore with 6" internal length = AOT-04 x 6

Cylinder Force and Volume Charts

Extend Forces in pounds (newtons)

All Dimensions in Inches (mm)
All Forces in Pounds (Newtons)

Bore	Piston Area		PSI (bar) 40	(3)	60	(4)	80	(6)	100	(7)	150	(10)	200	(14)	Volume Cu Ft (cm3) Displacement Per Inch	
1-1/2"	1.77	(11.40)	71	(315)	106	(472)	142	(629)	177	(786)	266	(1179)	353	(1570)	.00102	(29)
2"	3.14	(20.27)	126	(559)	189	(839)	251	(1119)	314	(1398)	471	(2097)	628	(2793)	.00182	(52)
2-1/2"	4.91	(31.67)	196	(874)	295	(1311)	393	(1748)	491	(2185)	737	(3277)	982	(4368)	.00284	(80)
3-1/4"	8.30	(53.32)	332	(1477)	498	(2215)	664	(2953)	830	(3692)	1245	(5538)	1659	(7379)	.00480	(136)
4"	12.57	(81.07)	503	(2237)	754	(3355)	1005	(4473)	1257	(5592)	1886	(8388)	2513	(11178)	.00727	(206)
5"	19.64	(126.71)	785	(3491)	1178	(5240)	1571	(6988)	1964	(8736)	2946	(13104)	3928	(17472)	.01137	(322)
6"	28.27	(182.39)	1130	(5026)	1696	(7544)	2262	(10061)	2827	(12574)	4240	(18860)	5654	(25149)	.01636	(463)
7"	38.49	(247.91)	1540	(6831)	2309	(10242)	3079	(13658)	3849	(17074)	5774	(25613)	7698	(34148)	.02227	(631)
8"	50.26	(324.26)	2010	(8940)	3015	(13411)	4020	(17881)	5026	(22356)	7539	(33533)	10052	(44711)	.02909	(829)
10"	78.54	(506.74)	3141	(13974)	4712	(20961)	6283	(27948)	7854	(34935)	11781	(52402)	15700	(69834)	.04545	(1282)
12"	113.10	(729.72)	4524	(20123)	6786	(30184)	9048	(40246)	11310	(50307)	16965	(75460)	22620	(100614)	.06545	(1852)

Deduct these Forces for Retract Strokes

Rod	Rod Area		PSI (bar) 40	(3)	60	(4)	80	(6)	100	(7)	150	(10)	200	(14)	Volume Cu Ft (cm3) Displacement Per Inch	
5/8"	.307	(1.98)	12	(53)	18	(80)	25	(111)	31	(138)	46	(205)	61	(271)	.00018	(5)
1"	.785	(5.06)	31	(138)	47	(209)	63	(280)	78	(351)	118	(525)	157	(698)	.00045	(13)
1-3/8"	1.485	(9.58)	59	(262)	89	(396)	119	(529)	149	(663)	222	(997)	297	(1321)	.00086	(24)
1-3/4"	2.404	(15.51)	96	(423)	144	(641)	192	(854)	240	(1068)	360	(1601)	480	(2135)	.00139	(39)
2"	3.142	(20.16)	126	(559)	189	(839)	251	(1118)	314	(1398)	471	(2096)	628	(2795)	.00182	(52)
2-1/2"	4.909	(31.67)	196	(873)	295	(1310)	393	(1747)	491	(2184)	736	(3275)	981	(4367)	.00284	(80)

NFPA Aluminum & Steel Cylinders

NFPA Rodlock LE option Passive
LD option Passive with manual release

Precision operation maintains accurate positioning

Large clamping surface ensures consistent performance

Spring-engaged units engage in power-off situations

Sealed to withstand harsh environments

Technical data

Bore sizes
NFPA cylinders: 1-1/2" to 6" (see chart at right for bore/rod combinations)

Rod lock release pressure: 60 to 120 psi (4 to 8 bar)

Caution: Rodlock will not hold a load when mounted to cylinders with operating pressures in excess of 100 psi (7 bar). Refer to holding force for rod lock chart.

Temperature range: 33°F to 150°F (0.5°C to 66°C)
Viton seal option available

Rod lock mounting: Any position

Holding: Operates in both directions

Notes

If personal safety is required, an unrelated, redundant safety system should be used.

Rod locks require clean, dry, pressure regulated air, lubrication is not required.

The rod must be kept clean and dry to maintain optimum holding forces.

Rod rotation is not allowed when rod lock is engaged (not intended for torsional braking).

Holding force for rod lock

Rod Diameter	Bore Size	Holding* Force
0.625 in	1.500 in	180 lbs
0.625 in	2.000 in	314 lbs
0.625 in	2.500 in	491 lbs
1.000 in	3.250 in	830 lbs
1.000 in	4.000 in	1257 lbs
1.000 in	5.000 in	1960 lbs
1.375 in	6.000 in	2825 lbs

* Oversize rod diameters available upon request.

***CAUTION: Rated holding force corresponds to static load conditions. If the rated value is exceeded, slipping may occur.**

(Dimensions in inches)

LE Option (Passive)

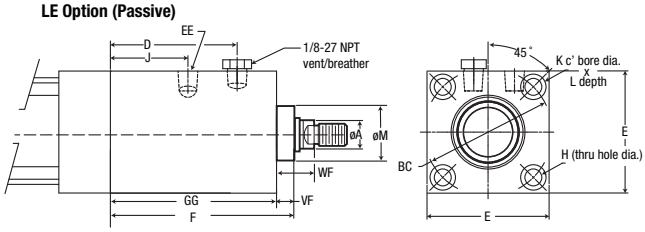

LD Option (Passive w/Manual Release)

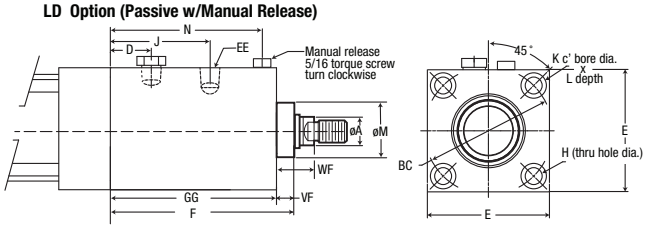

LE Option

Bore Dia.	øA	øBC	E	EE	D	GG	F	VF	J	øH	K	L -.001 -.003	øM	WF
1.50	0.625	2.022	2.00	1/8 NPT	1.95	2.397	2.77	0.375	0.91	0.281	0.438	0.909	1.125	1.00
2.00	0.625	2.602	2.50	1/8 NPT	2.08	2.422	2.80	0.375	1.02	0.344	0.516	1.03	1.125	1.00
2.50	0.625	3.097	3.00	1/8 NPT	2.13	2.540	2.91	0.375	1.02	0.344	0.516	1.03	1.125	1.00
3.25	1.000	3.903	3.75	1/4 NPT	2.99	3.976	4.48	0.500	1.56	0.406	0.719	1.28	1.500	1.375
4.00	1.000	4.695	4.50	1/4 NPT	2.99	3.976	4.48	0.500	1.56	0.406	0.719	1.28	1.500	1.375
5.00	1.000	5.798	5.50	1/4 NPT	3.34	4.443	4.69	0.500	1.56	0.531	0.844	1.50	1.500	1.375
6.00	1.375	6.901	6.50	1/4 NPT	4.43	5.306	5.36	0.625	1.68	0.531	0.844	1.50	2.000	1.625

LD Option

Bore Dia.	øA	øBC	E	EE	D	GG	F	VF	J	øH	K	L -.001 -.003	M	N	WF
1.5	0.625	2.022	2.00	1/8 NPT	1.01	2.625	3.00	0.375	1.91	0.281	0.438	0.909	1.125	2.405	1.00
2.0	0.625	2.602	2.50	1/8 NPT	1.00	2.875	3.25	0.375	1.980	0.344	0.516	1.03	1.125	2.535	1.00
2.5	0.625	3.097	3.00	1/8 NPT	1.04	2.875	3.38	0.500	2.12	0.344	0.516	1.03	1.125	2.529	1.00
3.25	1.000	3.903	3.75	1/4 NPT	1.37	4.500	5.00	0.500	2.99	0.406	0.719	1.28	1.500	3.869	1.375
4.0	1.000	4.695	4.50	1/4 NPT	1.69	4.875	5.37	0.500	3.15	0.406	0.719	1.28	1.500	4.25	1.375
5.0	1.000	5.798	5.50	1/4 NPT	1.50	5.375	5.87	0.500	3.38	0.531	0.844	1.50	1.500	4.655	1.375
6.0	1.375	6.901	6.50	1/4 NPT	1.87	6.375	7.13	0.750	3.67	0.531	0.844	1.50	2.000	5.21	1.625

NFPA Aluminum & Steel Cylinders

Piston Rod Diameter Selection

Applications requiring long extend (push) strokes may require oversize piston rod diameters to prevent buckling.

To determine the correct rod diameter for your application follow these simple steps:

1. Select the force from the Cylinder Force and Volume Chart that is required for your application. For pressures not shown use: **Force = Piston Surface Area x Operating Pressure**
2. From the Cylinder Mounting Diagram Chart (next page) select the mounting style being used.
3. To obtain effective length "L", multiply cylinder stroke by appropriate stroke factor located in Cylinder Mounting Diagram Chart . If cylinder has extra rod extension add this to the stroke length before obtaining effective length. **Effective Length = Actual Stroke x Stroke Factor**
4. To determine adequate rod diameter locate calculated effective length "L" on Rod Selection chart (below).
5. Selecting Stop Tubes: Stop tubes enhance the transverse load carrying capability of a long stroke cylinder by increasing the distance between the piston and rod bearing at full extension. When the value of L (calculated from the Adequate Rod Diameter Chart) is less than 40", a stop tube is **not** required. However, if L is 40" or more, 1" of stop tube is recommended for every 10" (or fraction thereof) over 40".
6. Recommended Mounting Styles for Maximum Stroke and Thrust Load:
   - Multiply cylinder stroke by appropriate stroke factor to obtain effective length L.
   - If cylinder has extra rod extension, add this extension to the stroke length before obtaining effective length.

Stop Tube

Enhances the transverse load carrying capability of a long stroke cylinder by increasing the distance between the piston and rod bearing at full extension when placed on head end. Ideal for those applications requiring longer strokes or where additional rod stability is desired.
TO ORDER: Enter option code ST(_C) Cap End or ST(_R) Rod End. Specify stop tube length.
NOTE: ST(_R) Alternate design: the stop tube rod end design changes when the stop tube exceeds J lengths in the chart.

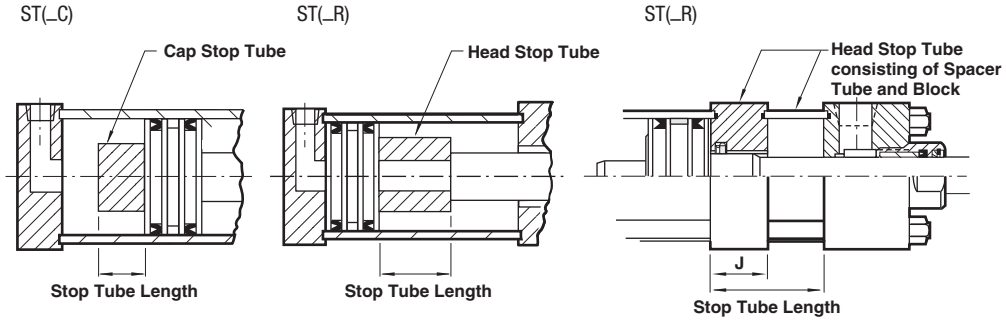

Bore	1-1/2" (38.10)	2" (50.80)	2-1/2" (63.50)	3-1/4" (82.55)	4" (101.60)	5" (127.00)	6" (152.40)	7" (177.80)	8" (203.20)
J	1 (25.40)	1 (25.40)	1 (25.40)	1.250 (31.75)	1.250 (31.75)	1.250 (31.75)	1.500 (38.10)	1.500 (38.10)	1.500 (38.10)

Rod Selection Chart

Extended Force (lbs)	Maximum effective length "L" recommended for rod diameters 5/8"	1"	1-3/8"	1-3/4"	2"	2-1/2"
50	95	–	–	–	–	–
100	65	170	–	–	–	–
150	50	135	260	–	–	–
200	43	115	220	–	–	–
300	34	93	180	300	–	–
500	25	70	135	250	–	–
750	20	56	110	185	250	–
1000	17	48	94	160	220	–
1500	13	38	80	130	170	260
2000	11	33	64	110	140	225
3000	9	26	51	90	115	180
4000	7	22	44	75	100	155
5000	–	20	39	66	88	140
6000	–	18	35	60	79	125
8000	–	15	30	52	68	110
10000	–	12	26	46	60	95
12500	–	10	22	41	52	86
15000	–	–	19	37	48	79
20000	–	–	14	29	41	68

Note: In some cases it may be necessary to use a larger bore cylinder than is required for force in order to obtain an adequate rod diameter.

NFPA Aluminum & Steel Cylinders

Cylinder Mounting Diagram Chart

Cylinder Mounting	Rod End Connection	Mounting Style	Stroke Factor
Side Tapped, Head or Cap Flange, Tie Rod, Center or Side Lug	Fixed and Rigidly Guided	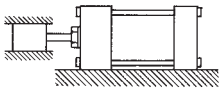	.50
Side Tapped, Head or Cap Flange, Tie Rod, Center or Side Lug	Pivoted and Rigidly Guided	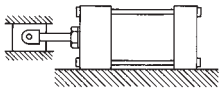	.70
Side Tapped, Head or Cap Flange, Tie Rod, Center or Side Lug	Supported but not Rigidly Guided	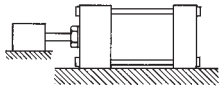	2.00
Side Tapped, Head or Cap Flange, Tie Rod, Center or Side Lug	None	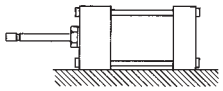	5.00
Head Trunnion	Pivoted and Rigidly Guided	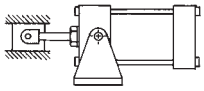	1.00
Center Trunnion	Pivoted and Rigidly Guided	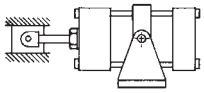	1.50
Cap Trunnion or Clevis	Pivoted and Rigidly Guided	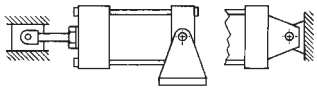	2.00

Tie Rod Tightening:

In order to reduce the possibility of cylinder binding or damage, tighten to quarter unit increments of the final torque value in the following order: #1, #2, #3, #4.

Then torque fully to the recommended foot pounds in the same order.

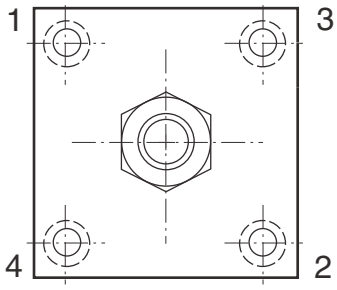

Tie Rod Supports:

For long strokes, tie rod supports are provided. These supports are of the same envelope dimensions as the cylinder end caps.

NOTE: See chart for number of tie rod supports required.

Number of Tie Rod Supports Required

Cylinder Bore	Cylinder Stroke (in) 60	75	95	115	135
1-1/2"	1	1	2	2	3
2"	–	1	1	2	2
2-1/2"	–	–	1	1	1
3-1/4"	–	–	–	1	1
4"	–	–	–	–	1
5" and over	–	–	–	–	–

Recommended Torques for Tightening Tie Rods

Cylinder Bore	Standard Steel Tie Rods	Stainless Steel Tie Rods
1-1/2"	6.6 ft. lbs.	3.75 ft. lbs.
2"	11 ft. lbs.	7.5 ft. lbs.
2-1/2"	13 ft. lbs.	7.5 ft. lbs.
3-1/4"	20 ft. lbs.	13-14 ft. lbs.
4"	24 ft. lbs.	13-14 ft. lbs.
5"	40 ft. lbs.	33 ft. lbs.
6"	48 ft. lbs.	33 ft. lbs.
7" & 8"	100 ft. lbs.	65 ft. lbs.
10"	150 ft. lbs.	75 ft. lbs.
12"	175 ft. lbs.	87.5 ft. lbs.

NORGREN
ENGINEERING ADVANTAGE

NFPA Aluminum & Steel Cylinders

Series A & EA Cylinder Weights lbs (kg)

Bore Inch (mm)	Rod Inch (mm)	Mounting Code 01, 05, 16	03	04	06	7R, 8R, 09, 60	11	12	15	20, 21, 22, 32	10, 42, 52	Add Per Inch of Stroke
1-1/2" (38.10)	5/8" (15.88)	1.9 (.86)	2.6 (1.18)	2.7 (.23)	2.1 (.95)	2.5 (1.13)	2.3 (1.04)	2.8 (1.27)	2.5 (1.13)	3.0 (1.36)	2.8 (1.27)	0.18 (.08)
2" (50.80)	5/8" (15.88)	2.8 (1.27)	3.9 (.77)	4.0 (1.81)	3.1 (1.41)	3.5 (1.59)	3.3 (1.50)	4.0 (1.81)	3.8 (1.72)	4.2 (1.91)	3.9 (1.77)	0.21 (.10)
	1" (25.40)	3.4 (1.54)	4.4 (2.00)	4.6 (2.09)	3.7 (1.68)	4.1 (1.86)	3.9 (1.77)	4.6 (2.09)	4.4 (2.00)	4.8 (2.18)	4.5 (2.04)	0.35 (.16)
2-1/2" (63.50)	5/8" (15.88)	3.9 (1.77)	5.3 (2.40)	5.5 (2.49)	4.1 1.86)	4.6 (2.09)	4.4 (2.00)	5.3 (2.40)	5.3 (2.40)	5.5 (2.49)	5.3 (2.40)	0.23 (.10)
	1" (25.40)	4.5 (2.04)	5.9 (2.68)	6.1 (2.77)	4.7 (2.13)	5.2 (2.36)	5.1 (2.31)	5.9 (2.68)	6.0 (2.72)	6.1 (2.77)	5.9 (2.68)	0.38 (.17)
3-1/4" (82.55)	1" (25.40)	7.3 (3.31)	10.8 (4.90)	11.1 (5.03)	7.7 (3.49)	8.9 (4.04)	8.2 (3.72)	11.1 (5.03)	9.7 (4.40)	11.8 (5.35)	11.4 (5.17)	0.42 (.19)
	1-3/8" (34.93)	8.2 (3.72)	11.5 (5.22)	12.1 (5.49)	8.7 (3.95)	9.9 (4.50)	9.2 (4.17)	12.1 (5.49)	10.7 (4.85)	12.8 (5.80)	12.4 (5.62)	0.63 (.29)
4" (101.60)	1" (25.40)	9.8 (4.45)	14.8 (6.71)	15.1 (6.85)	10.2 (4.63)	11.5 (5.22)	10.9 (4.94)	14.8 (6.71)	13.3 (6.03)	15.5 (7.03)	15.2 (6.89)	0.45 (.20)
	1-3/8" (34.93)	10.8 (4.90)	15.5 (7.03)	16.1 (7.30)	11.2 (5.08)	12.5 (5.67)	11.9 (5.40)	15.8 (7.17)	14.3 (6.49)	16.5 (7.48)	16.2 (7.35)	0.66 (.30)
5" (127.00)	1" (25.40)	15.1 (6.85)	22.7 (10.30)	23.1 (10.48)	16.1 (7.30)	18.7 (8.48)	17.6 (7.98)	22.2 (10.07)	20.8 (9.43)	22.8 (10.34)	22.5 (10.21)	0.51 (.23)
	1-3/8" (34.93)	16.2 (7.35)	23.5 (10.66)	24.1 (10.93)	17.2 (7.80)	19.7 (8.94)	18.6 (8.44)	23.2 (10.52)	21.9 (9.93)	23.9 (10.84)	23.5 (10.70)	0.73 (.33)
6" (152.40)	1-3/8" (34.93)	23.5 (16.19)	35.6 (16.15)	36.3 (16.47)	24.5 (11.11)	27.3 (12.38)	26.6 (12.07)	35.7 (10.66)	32.1 (14.56)	37.0 (16.78)	36.3 (16.47)	0.77 (.35)
	1-3/4" (44.45)	24.8 (11.27)	36.9 (16.77)	37.6 (17.09)	25.8 (11.73)	28.3 (12.86)	27.9 (12.68)	37.0 (16.82)	33.4 (15.18)	38.3 (17.41)	37.6 (17.09)	1.03 (.47)
7" (177.80)	1-3/8" (34.93)	32.1 (14.56)	32.1 (14.56)	32.1 (14.56)	33.4 (15.15)	33.5 (15.20)	36.8 (16.69)	35.2 (15.97)	32.1 (14.56)	48.9 (22.18)	48.2 (21.86)	1.00 (.45)
	1-3/4" (44.45)	33.4 (15.18)	33.4 (15.18)	33.4 (15.18)	34.7 (15.77)	34.8 (15.82)	38.1 (17.32)	36.5 (16.59)	33.4 (15.18)	50.2 (22.82)	49.5 (22.50)	1.26 (.57)
8" (203.20)	1-3/8" (34.93)	40.0 (18.14)	40.0 (18.14)	40.0 (18.14)	41.3 (18.73)	41.4 (18.78)	45.7 (20.73)	43.0 (19.50)	40.0 (18.14)	60.5 (27.44)	59.7 (27.08)	1.06 (.48)
	1-3/4" (44.45)	47.3 (21.50)	41.3 (18.77)	41.3 (18.77)	42.6 (19.36)	42.7 (19.41)	47.0 (21.36)	44.3 (20.14)	41.3 (18.77)	61.8 (28.09)	61.0 (27.73)	1.32 (.60)

NFPA Aluminum & Steel Cylinders

Series J & EJ Cylinder Weights lbs (kg)

Bore Inch (mm)	Rod Inch (mm)	Mounting Code 01, 05, 16	03	04	06	07, 08, 09	11	12	15	20, 21, 22, 32	10, 42, 52	Add Per Inch of Stroke
1-1/2" (38.10)	5/8" (15.88)	3.1 (1.42)	3.7 (1.67)	3.7 (1.67)	3.2 (1.48)	3.8 (1.73)	4.9 (2.24)	3.9 (1.76)	3.1 (1.42)	4.1 (1.87)	4.9 (2.24)	.18 (.08)
2" (50.80)	5/8" (15.88)	5.0 (2.27)	5.9 (2.67)	5.9 (2.67)	5.2 (2.35)	5.7 (2.58)	7.6 (3.46)	5.8 (2.61)	5.0 (2.27)	6.2 (2.82)	7.6 (3.46)	.28 (.13)
	1" (25.40)	5.1 (2.33)	6.0 (2.73)	6.0 (2.73)	5.3 (2.42)	5.8 (2.64)	7.8 (3.52)	5.9 (2.67)	5.1 (2.33)	6.4 (2.89)	7.8 (3.52)	.42 (.19)
2-1/2" (63.50)	5/8" (15.88)	7.2 (3.26)	8.1 (3.68)	8.1 (3.68)	7.4 (3.35)	7.9 (3.57)	10.3 (4.68)	7.9 (3.60)	7.2 (3.26)	9.3 (4.20)	10.3 (4.68)	.40 (.18)
	1" (25.40)	7.3 (3.32)	8.3 (3.75)	8.3 (3.75)	7.5 (3.41)	8.0 (3.64)	10.5 (4.74)	8.1 (3.66)	7.3 (3.32)	9.4 (4.26)	10.5 (4.74)	.54 (.25)
3-1/4" (82.55)	1" (25.40)	11.1 (5.02)	14.3 (6.50)	14.3 (6.50)	11.4 (5.16)	11.7 (5.30)	16.8 (7.63)	12.6 (5.70)	11.1 (5.02)	16.0 (7.26)	16.8 (7.63)	.72 (.33)
	1-3/8" (34.93)	11.3 (5.11)	14.5 (6.59)	14.5 (6.59)	11.6 (5.25)	11.9 (5.39)	17.0 (7.72)	12.8 (5.79)	11.3 (5.11)	16.2 (7.35)	17.0 (7.72)	.92 (.42)
4" (101.60)	1" (25.40)	20.3 (9.22)	24.9 (11.29)	24.9 (11.29)	20.6 (9.36)	20.8 (9.45)	27.4 (12.43)	21.8 (9.90)	20.3 (9.22)	26.9 (12.20)	27.4 (12.43)	.81 (.37)
	1-3/8" (34.93)	20.5 (9.31)	25.1 (11.38)	25.1 (11.38)	20.8 (9.45)	21.0 (9.54)	27.6 (12.52)	22.0 (9.99)	20.5 (9.31)	27.1 (12.29)	27.6 (12.52)	1.1 (.50)
5" (127.00)	1" (25.40)	34.6 (15.72)	40.4 (18.33)	40.4 (18.33)	35.2 (15.97)	38.0 (17.25)	43.2 (19.60)	36.3 (16.49)	34.6 (15.72)	43.2 (19.60)	43.2 (19.60)	.98 (.45)
	1-3/8" (34.93)	34.8 (15.81)	40.6 (18.42)	40.5 (18.42)	35.4 (16.06)	38.2 (17.34)	43.4 (19.69)	36.5 (16.58)	34.8 (15.81)	43.4 (19.69)	43.4 (19.69)	1.18 (.54)
6" (152.40)	1-3/8" (34.93)	53.1 (24.09)	63.9 (29.02)	63.9 (29.02)	54.3 (24.66)	56.4 (25.59)	65.3 (29.65)	57.1 (25.93)	53.1 (24.09)	68.1 (39.81)	65.3 (29.65)	1.68 (.76)
	1-3/4" (44.45)	53.3 (24.21)	64.2 (31.41)	64.2 (31.41)	54.6 (24.78)	56.7 (25.72)	65.6 (29.77)	57.4 (26.05)	53.3 (24.21)	68.1 (30.93)	65.6 (29.77)	1.94 (.88)
7" (177.80)	1-3/8" (34.93)	73.0 (33.14)	73.0 (33.14)	73.0 (33.14)	74.0 (33.60)	76.5 (34.73)	96.0 (43.58)	85.0 (38.59)	73.0 (33.14)	—	96.0 (43.58)	1.75 (.80)
	1-3/4" (44.45)	73.3 (33.26)	73.3 (33.26)	73.3 (33.26)	74.3 (33.71)	76.8 (34.85)	96.3 (43.70)	85.3 (38.71)	73.3 (33.26)	—	96.3 (43.70)	2.01 (.91)
8" (203.20)	1-3/8" (34.93)	92.3 (41.88)	92.3 (41.88)	92.3 (41.88)	93.6 (42.50)	95.8 (43.47)	120.0 (54.48)	97.8 (44.41)	92.3 (41.88)	—	120.0 (54.48)	2.18 (.99)
	1-3/4" (44.45)	92.5 (42.00)	92.5 (42.00)	92.5 (42.00)	93.9 (42.62)	96.0 (43.59)	120.3 (54.60)	98.1 (44.52)	92.5 (42.00)	—	120.3 (54.60)	2.44 (1.11)
10" (254.00)	1-3/4" (44.45)	179.9 (81.66)	179.9 (81.66)	179.9 (81.66)	181.6 (82.46)	184.3 (83.65)	228.0 (103.51)	186.1 (84.50)	179.9 (81.66)	—	228.0 (103.51)	3.43 (1.56)
	2" (50.80)	180.0 (81.72)	180.1 (81.76)	180.1 (81.76)	181.8 (82.55)	184.5 (83.74)	228.2 (103.61)	186.3 (84.59)	180.1 (81.76)	—	228.2 (103.61)	3.64 (1.65)
12" (304.80)	2" (50.80)	288.0 (130.75)	288.0 (130.75)	288.0 (130.75)	289.0 (131.21)	293.0 (133.02)	380.0 (172.52)	297.0 (134.84)	288.0 (130.75)	—	380.0 (172.52)	4.12 (1.87)
	2-1/2" (63.50)	288.5 (130.98)	288.5 (130.98)	288.5 (130.98)	289.5 (131.43)	293.5 (133.25)	380.5 (172.75)	297.5 (135.20)	288.5 (130.98)	—	380.5 (172.75)	4.62 (2.10)

Series A & J Breakaway pressures

Bore	Series J Extend	Series J Retract	Low Friction Seals (LF) Extend	Low Friction Seals (LF) Retract
1-1/2", 2", 2-1/2"	5	6	3	4
3-1/4", 4"	4	5	2	3
5", 6", 7", 8"	3	4	1	2
10"	3	4	1	2
12"	3	4	1	2

Note: Breakaway pressures were established with the cylinders mounted horizontally and no load on the piston rod.

NORGREN ENGINEERING ADVANTAGE

NEN Series NFPA Aluminum Cylinders

1-1/2" to 4" bore sizes

Competitively priced
Magnetic piston standard
Adjustable cushion standard
Sleeve nut construction standard

Technical data

Medium:
Filtered compressed air

Operating temperature:
-25°F to 140°F (-5°C to 60°C)
With Viton Seals: -23˚F to 300˚F (-5°C to 150°C)

Operating Pressure:
Minimum 7 psi (.5 bar)
Maximum 140 psi (9.7 bar)

Bore Sizes: 1-1/2", 2", 2-1/2", 3-1/4", 4"

Rod Diameter: 5/8" diameter piston rod in 1-1/2", 2", 2-1/2" bore
1" diameter piston rod in 3-1/4" and 4" bore

Lubrication: None required
Norgren Air Cylinders are rated for "no lube added" service.

Materials
Head and End Caps:
Die cast aluminum painted for corrosion protection.
Tube: Aluminum alloy, hard coat anodized
Piston: machined high-strength aluminum casting.
Rod Bearing: clean metal teflon composite
Seals: nitrile rod seal/wiper, nitrile piston seals, nitrile tube end seals
Tie Rods: Nickel plated high-tensile strength steel.

1 Piston Rod: Hard chrome plated carbon steel, ground and polished.
2 Head Bearing Housing and cap: Die cast aluminum
3 Tie-Rods: Nickel plated steel
4 Piston: Machined aluminum .
5 Captive Cushion Needle Adjustment: Provides safe and precise cushion adjustment.
6 Wear Ring: Teflon® material provides supreme wear and excellent bearing support.
7 Cylinder Tube: Hard anodized aluminum alloy, with corrosion and score resistant surface finish.
8 Piston Rod Wiper/Seal: Abrasion resistant nitrile.
9 Piston Seal: Single Nitrile bi-directional piston seal.
10 Cushion Seal: Nitrile cushion seal is captured within a precision machined groove allowing for linear and radial float eliminating misalignment.
11 Rod Bearing: A composite of Teflon and polyphenylene sulfide and bronze molded to a steel backing provides low friction and excellent linear features.

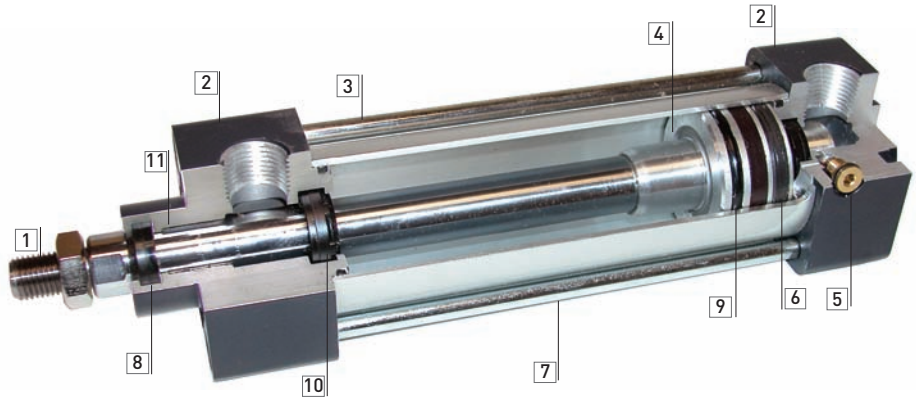

NEN "Add-a-mount" flexibility

NEN cylinders allow you to add NFPA mounts shown below when you order the cylinder from the factory, or add the mounts later.

NFPA MF1

NFPA MF2

NFPA MP1

NFPA MP2

NEN Series NFPA Aluminum Cylinders

Cylinder Order Information

NEN 1 C x 4 E – MP1 – V

(1) (2) (3) (4) (5) (6) (7)

Series
NEN

Piston Rod Threads	
Small Male (Solid) (std)	1
Intermediate Thread Male (Solid)	2
Female	3

Bore	Single rod
1-1/2"	C
2.0"	D
2-1/2"	E
3-1/4"	F
4.0"	G

Stroke (whole inches)	
All bores	48" max.*

* Conatact factory for strokes longer than 48".

Fraction of Stroke length	
0	Blank
0.125"	C
0.250	E
0.375	G
0.500	J
0.625	M
0.750	P
0.875	S

Additional Options	
Viton® Seals	V
Rod Extension	RX
Non-standard piston rod thread	T
Piston Rod thread extension	TX
Stainless steel piston rod	SS
Stainless steel tie rods	S

Mounting Options**	
MS4 (standard)	blank
Head Rectangular Flange	MF1
Cap Rectangular Flange	MF2
Detachable Cap Clevis	MP2
Cap Fixed Clevis	MP1
Tie Rod Extended both ends	MX1
Tie Rod Extended Cap	MX2
Tie Rod Extended Head	MX3
Side Lug Mount	MS2

** For factory installed mounts specify mounting option in position 6. If no mount required leave position 6 blank. Mounting kits can be ordered separately
Contact factory for mounting kits, or visit www.norgren.com

NORGREN ENGINEERING ADVANTAGE

NEN Series NFPA Aluminum Cylinders

NFPA (MS4) Side tap mount standard

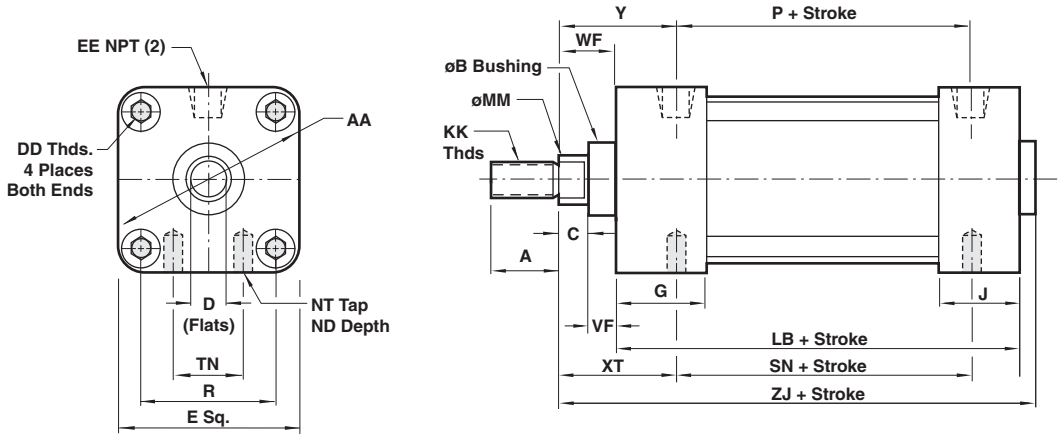

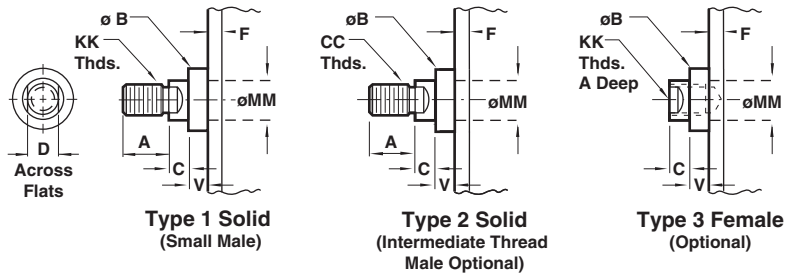

Type 1 Solid
(Small Male)

Type 2 Solid
(Intermediate Thread Male Optional)

Type 3 Female
(Optional)

Bore	1-1/2"	2"	2-1/2"	3-1/4"	4"
ø Rod	5/8"	5/8"	5/8"	1"	1"
A	0.750	0.750 (19.05)	0.750 (19.05)	1.125 (28.58)	1.125 (28.58)
AA	2.020	2.600 (66.04)	3.100 (78.74)	3.900 (99.06)	4.700 (119.38)
B	1.124	1.124 (28.55)	1.124 (28.55)	1.500 (38.07)	1.499 (38.07)
BA	1.125 (28.58)	1.125 (28.58)	1.125 (28.58)	1.250 (28.58)	1.250 (28.58)
C	0.375 (9.53)	0.375 (9.53)	0.375 (9.53)	0.500 (12.70)	0.500 (12.70)
CC	1/2-20	1/2-20	1/2-20	7/8-14	7/8-14
D	0.562 (14.27)	0.562 (14.27)	0.562 (14.27)	0.875 (22.23)	0.875 (22.23)
DD	1/4-28	5/16-24	5/16-24	3/8-24	3/8-24
E	2.000 (50.80)	2.500 (63.50)	3.000 (76.20)	3.750 (95.25)	4.500 (114.30)
EE	3/8	3/8	3/8	1/2	1/2
G	1.260 (32.00)	1.260 (32.00)	1.300 (33.02)	1.570 (39.88)	1.570 (39.88)
J	1.010 (25.65)	1.060 (26.92)	1.060 (26.92)	1.180 (29.97)	1.180 (29.97)
KK	7/16-20	7/16-20	7/16-20	3/4-16	3/4-16
LB	3.625 (92.08)	3.625 (92.08)	3.750 (95.25)	4.250 (107.95)	4.250 (107.95)
MM	0.625 (15.88)	0.625 (15.88)	0.625 (15.88)	1.000 (25.40)	1.000 (25.40)
NT	1/4-20	5/16-18	3/8-16	1/2-13	1/2-13
ND	0.281 (7.14)	0.438 (11.13)	0.593 (15.06)	0.625 (15.88)	0.625 (15.88)
P	2.360 (59.94)	2.400 (60.96)	2.480 (62.99)	2.720 (69.09)	2.720 (69.09)
R	1.430 (36.32)	1.840 (46.74)	2.190 (55.63)	2.760 (70.10)	3.320 (84.33)
SN	2.250 (57.15)	2.250 (57.15)	2.375 (60.33)	2.625 (66.68)	2.625 (66.68)
TN	0.625 (15.88)	0.875 (22.23)	1.250 (31.75)	1.500 (38.10)	2.063 (52.40)
VF	0.625 (15.88)	0.625 (15.88)	0.625 (15.88)	0.875 (22.23)	0.875 (22.23)
WF	1.000 (25.40)	1.000 (25.40)	1.000 (25.40)	1.375 (34.93)	1.375 (34.93)
XT	1.938 (49.23)	1.938 (49.23)	1.938 (49.23)	2.438 (61.93)	2.438 (61.93)
Y	1.710 (43.43)	1.710 (43.43)	1.750 (44.45)	2.340 (59.44)	2.340 (59.44)
ZJ	4.750 (120.65)	4.750 (120.65)	4.870 (123.95)	5.820 (147.83)	5.820 (147.83)

NEN Series NFPA Aluminum Cylinders

All Dimensions in Inches

NFPA (MF1) Head Rectangular Flange Mount

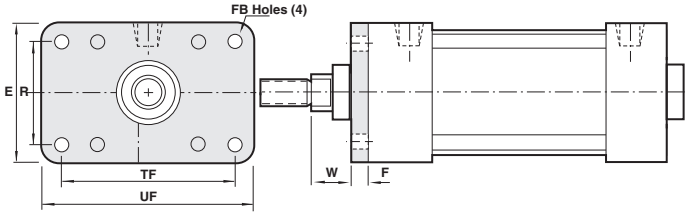

Bore	1-1/2"	2"	2-1/2"	3-1/4"	4"
E	2.000	2.500	3.000	3.750	4.500
F	.375	.375	.375	.625	.625
FB	.313	.375	.375	.438	.438
R	1.428	1.838	2.192	2.758	3.323
TF	2.750	3.375	3.875	4.688	5.438
UF	3.375	4.125	4.625	5.500	6.250
W	.625	.625	.625	.750	.750

NFPA (MF2) Cap Rectangular Flange Mount

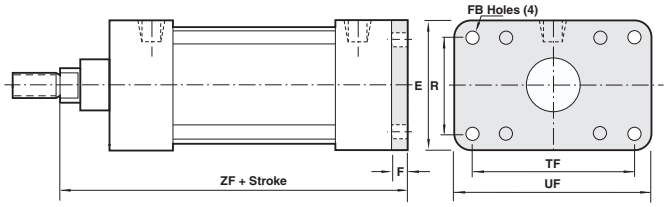

Bore	1-1/2"	2"	2-1/2"	3-1/4"	4"
E	2.000	2.500	3.000	3.750	4.500
F	.375	.375	.375	.625	.625
FB	.313	.375	.375	.438	.438
R	1.428	1.838	2.192	2.758	3.323
TF	2.750	3.375	3.875	4.687	5.438
UF	3.375	4.125	4.625	5.500	6.250
ZF	5.000	5.000	5.125	6.250	6.250

MP1 Mount

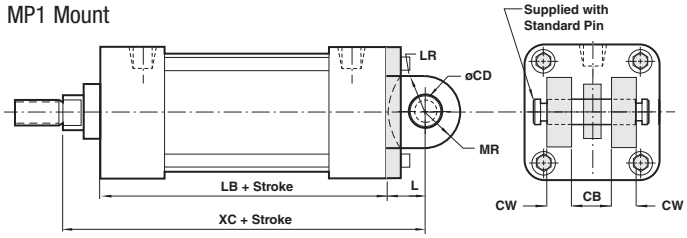

Bore	1-1/2"	2"	2-1/2"	3-1/4"	4"
CB	0.750	0.750	0.750	1.250	1.250
CD	0.500	0.500	0.500	0.750	0.750
CW	0.500	0.500	0.500	0.625	0.625
L	0.750	0.750	0.750	1.250	1.250
LB	3.625	3.625	3.750	4.250	4.250
LR	0.625	0.625	0.625	0.875	0.875
MR	0.625	0.625	0.625	0.875	0.875
XC	5.375	5.375	5.500	6.875	6.875

MP2 Mount

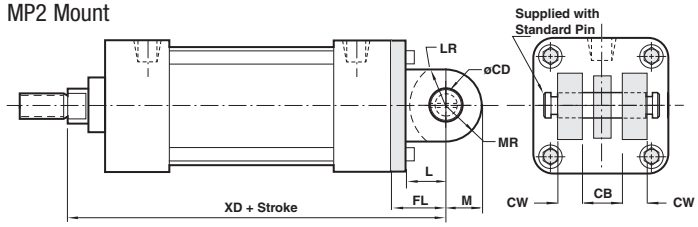

Bore	1-1/2"	2"	2-1/2"	3-1/4"	4"
CB	0.750	0.750	0.750	1.250	1.250
CD	0.500	0.500	0.500	0.750	0.750
CW	0.500	0.500	0.500	0.625	0.625
FL	1.125	1.125	1.125	1.875	1.875
L	0.750	0.750	0.750	1.250	1.250
LR	0.750	0.750	0.750	1.250	1.250
M	0.500	0.500	0.500	0.875	0.750
MR	0.625	0.625	0.625	0.875	0.875
XD	5.750	5.750	5.875	7.500	7.500

NFPA (MX1) (4) Extended Tie Rods Both Ends Mount
NFPA (MX2) Cap Tie Rods Extended Mount
NFPA (MX3) Head Tie Rods Extended Mount

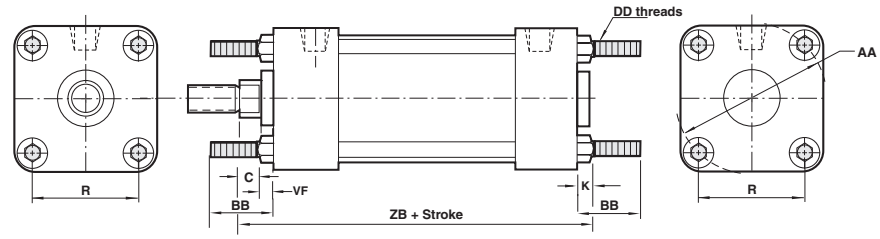

Bore	1-1/2"	2"	2-1/2"	3-1/4"	4"
AA	2.020	2.600	3.100	3.900	4.700
BB	1.000	1.125	1.125	1.375	1.375
C	0.375	0.375	0.375	0.500	0.500
DD	1/4 – 28	5/16 – 24	5/16 – 24	3/8 – 24	3/8 – 24
K	0.250	0.313	0.313	0.375	0.375
R	1.428	1.838	2.192	2.758	3.323
VF	0.625	0.625	0.625	0.875	0.875
ZB	4.875	4.938	5.063	6.000	6.000

NORGREN ENGINEERING ADVANTAGE

NEN Series NFPA Aluminum Cylinders

All Dimensions in Inches

MS2 Mount

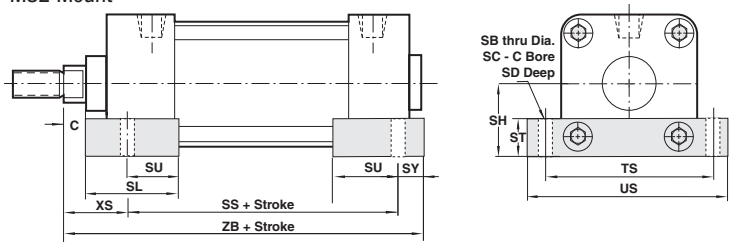

Bore	1-1/2"	2"	2-1/2"	3-1/4"	4"
SB	0.438	0.438	0.438	0.563	0.563
SC	0.690	0.690	0.690	0.800	0.800
SD	0.030	0.030	0.030	0.030	0.030
SH	1.000	1.250	1.500	1.875	2.250
SL	1.875	1.875	1.875	2.500	2.500
SY	0.940	0.940	0.940	1.250	1.250
SS	2.875	2.875	3.000	3.250	3.250
ST	0.620	0.620	0.750	1.000	1.000
SU	0.940	0.940	0.940	1.250	1.250
TS	2.750	3.250	3.750	4.750	5.500
US	3.500	4.000	4.500	5.750	6.500
XS	1.375	1.375	1.375	1.875	1.875
ZB	5.190	5.190	5.310	6.380	6.380

NEN Cylinder Accessories and Kits

RC (rod clevis)

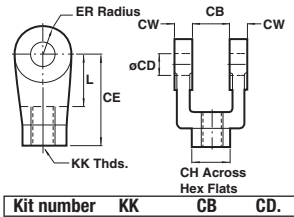

Kit number	KK	CB	CD.	CE	CH	CW	ER	L
NENC-RC	7/16-20	0.750	0.500	1.500	1.000	0.500	0.500	0.750
NENF-RC	3/4-16	1.250	0.750	2.375	1.250	0.625	0.750	1.250

RC and RE rod accessories come complete with pivot pin and retaining clips.

RE (rod eye)

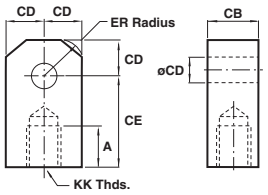

Kit number	KK	A	CB	CD	CE	ER
NENC-RE	7/16-20	0.750	0.750	0.500	1.500	0.563
NENF-RE	3/4-16	1.125	1.250	0.750	2.063	0.875

MS2 Mounting Kit

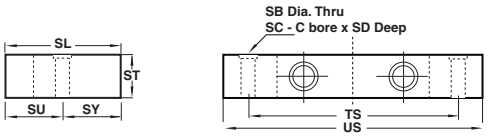

Kit number	SB	SC	SD	SY	ST	SU	TS	US
MK-NENC-MS2	0.41	0.69	0.03	0.94	0.62	0.94	2.75	3.50
MK-NEND-MS2	0.41	0.69	0.03	0.94	0.62	0.94	3.25	4.00
MK-NENE-MS2	0.41	0.69	0.03	0.94	0.75	0.94	3.75	4.50
MK-NENF-MS2	0.52	0.80	0.03	1.25	1.00	1.25	4.75	5.75
MK-NENG-MS2	0.52	0.80	0.03	1.25	1.00	1.25	5.50	6.50

NFPA MF1 / MF2 Mounting Kit - MK-NEN-MF1

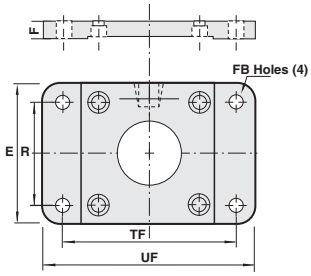

Kit number	UF	TF	FB	E	R	F
MK-NENC-MF1	3-3/8	2-3/4	5/16	2.00	1.43	3/8
MK-NEND-MF1	4-1/8	3-3/8	3/8	2-1/2	1.84	3/8
MK-NENE-MF1	4-5/8	3-7/8	3/8	3.00	2.19	3/8
MK-NENF-MF1	5-1/2	4-11/16	7/16	3-3/4	2.76	5/8
MK-NENG-MF1	6-1/4	5-7/16	7/16	4-1/2	3.32	5/8

NEN Series NFPA Aluminum Cylinders

All Dimensions in Inches

EB (eye bracket)

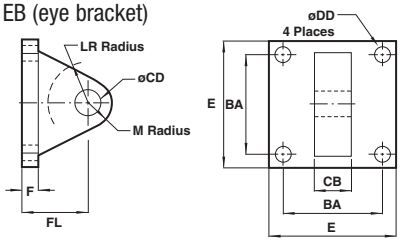

NFPA Eye Bracket	NENC-EB	NENF-EB
BA	1.625	2.563
CB	0.750	1.250
CD	0.500	0.750
DD	0.406	0.531
E	2.500	3.500
F	0.375	0.625
FL	1.125	1.875
LR	0.750	1.250
M	0.500	0.750

All dimensions ± .015 unless otherwise noted.

MP1 Mount kit - MK-NEN-MP1

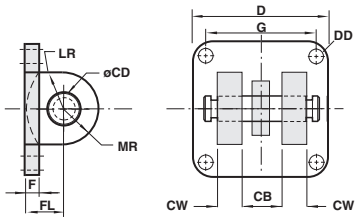

Kit number	CD	FL	F	B	CW	D	MR	G	LR	DD
MK-NENC-MP1	0.502	0.75	0.38	0.76	0.50	2.00	0.62	1.43	0.62	0.28
MK-NEND-MP1	0.502	0.75	0.38	0.76	0.50	2.50	0.62	1.84	0.62	0.34
MK-NENE-MP1	0.502	0.75	0.38	0.76	0.50	3.00	0.62	2.19	0.62	0.34
MK-NENF-MP1	0.752	1.25	0.63	1.26	0.62	3.75	0.87	2.77	0.87	0.41
MK-NENG-MP1	0.752	1.25	0.63	1.26	0.62	4.50	0.87	3.32	0.87	0.41

MP1 and MP2 kits come complete with mounting hardware, pivot pin and retaining clips.

MP2 Mount kit - MK - NEN - MP2

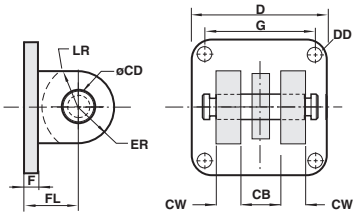

Kit number	CD	FL	F	B	CW	D	ER	G	DD
MK-NENC-MP2	0.502	1.13	0.38	0.76	0.50	2.00	0.62	1.43	0.28
MK-NEND-MP2	0.502	1.13	0.38	0.76	0.50	2.50	0.62	1.84	0.34
MK-NENE-MP2	0.502	1.13	0.38	0.76	0.50	3.00	0.62	2.19	0.34
MK-NENF-MP2	0.752	1.88	0.63	1.26	0.62	3.75	0.87	2.77	0.41
MK-NENG-MP2	0.752	1.88	0.63	1.26	0.62	4.50	0.87	3.32	0.41

MX1, MX2, MX3 Mount kit

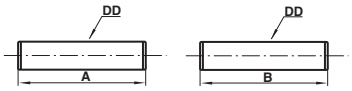

MX1 Mount Kit-MK-NEN-MX1 Tie Rod extended Both Ends			
Kit number	**DD**	**A**	**B**
MK-NENC-MX1	1/4-28	1.375	1.375
MK-NEND-MX1	5/16-24	1.500	1.500
MK-NENE-MX1	5/16-24	1.500	1.500
MK-NENF-MX1	3/8-24	1.812	1.937
MK-NENG-MX1	3/8-24	1.812	1.937
MX2 Mount Kit-MK-NEN-MX2 Tie Rod Extended Cap End			
Kit number	**DD**	**A**	**B**
MK-NENC-MX2	1/4-28	N/A	1.375
MK-NEND-MX2	5/16-24	N/A	1.500
MK-NENE-MX2	5/16-24	N/A	1.500
MK-NENF-MX2	3/8-24	N/A	1.937
MK-NENG-MX2	3/8-24	N/A	1.937
MX3 Mount Kit-MK-NEN-MX3 Tie Rod Extended Head End			
Kit number	**DD**	**A**	**B**
MK-NENC-MX3	1/4-28	1.375	N/A
MK-NEND-MX3	5/16-24	1.500	N/A
MK-NENE-MX3	5/16-24	1.500	N/A
MK-NENF-MX3	3/8-24	1.812	N/A
MK-NENG-MX3	3/8-24	1.812	N/A

P (pin)

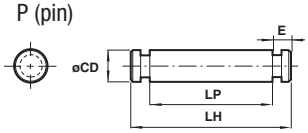

NFPA Pin	NEN-5	NEN-7
CD	0.500	0.750
E	0.109	0.125
LH	2.094	2.875
LP	1.875	2.625

NORGREN ENGINEERING ADVANTAGE

Engineering Advantage Solutions

Unit-Air Assembly

Description:	Cylinder/Valve combination unit
Typical Applications:	Sorting systems, conveyors, diverters, various industrial applications
Sectors/Industries:	Packaging, Material handling, Printing, Paper Converting, Pneumatic industrial machinery
Features & Benefits:	Space saving design Simplified installation - eliminates possible piping errors Faster response time
Norgren Offering:	Aluminum, Steel, or Stainless Steel construction Various bore sizes Valves can be adapted to multiple Norgren cylinder ranges

Multi-Position Cylinder

Description:	Back-to-back or Position-Air - cylinder with multiple piston rod positions
Typical Applications:	Sorting, conveyors, box erectors, rewinders, interfolders
Sectors/Industries:	Packaging, Material Handling, Paper Converting, Pneumatic industrial machinery
Features & Benefits:	Multiple positioning using one unit Use one multi-position cylinder instead of 2 separate cylinders Provides repeatable, positive-stop positioning
Norgren Offering:	Aluminum, Steel, or Stainless Steel construction Entire range of bore sizes available Design can be adapted to multiple Norgren cylinder ranges

Position Feedback

Description:	Cylinder with LVDT transducer (internal or external) or LRT linear potentiometer
Typical Applications:	Sorting systems, conveyors, diverters, various industrial applications
Sectors/Industries:	Packaging, Material handling, Printing, Paper Converting, Pneumatic industrial machinery
Features & Benefits:	Provides continuous indication of piston position Completely integrated Manufactured to accept multiple brands of feedback devices
Norgren Offering:	Aluminum, Steel, or Stainless Steel construction Various bore sizes Design can be adapted to multiple Norgren Cylinder ranges

Engineering Advantage Solutions

Baghouse Cylinder

Description:	Cylinder with valve, junction box, filter/regulator, lockout - comprehensive package
Typical Applications:	Baghouses, Dust collectors (poppet and damper operation)
Sectors/Industries:	Power Generation, Foundry & Steel, Food Manufacturers, Chemical Producers, General Waste Management
Features & Benefits:	Custom made to customer specifications Eliminates field installation costs of separately installing and wiring air valves, terminal strips, limit switches, junction boxes, filters/regulators. Complete factory assembled and tested valve operator package
Norgren Offering:	Aluminum or Steel construction, up to 14" bore size, custom stroke lengths, custom paints, custom configurations

Reciprocating Air Motors

Description:	Cylinder/valve combination with stroke signal valves serving as external pilots
Typical Applications:	Pumping media such as: lubrication, fiberglass, foams, resins, hot melt glue, liquid polymers, waste gases & liquids.
Sectors/Industries:	Industrial Packaging, Dispensing
Features & Benefits:	Self contained package for simplified installation (fewer components) Quick dispense response time, reduces winking Non-freezing designs available - reliability, automatic and continuous operation
Norgren Offering:	Aluminum, Steel, and Stainless Steel construction 1-1/2" - 12" bore sizes Custom configurations

Value Added

From Aesthetics, to Functionality, to Custom Coatings and Designs - Let Norgren engineer a solution that works for you!

LS Series Thrusters

Improved load carrying qualities

Ecology seal improves load dampening

Alignment coupler installed in tooling plate for self-alignment of cylinder rod to tooling plate connection prevents binding.

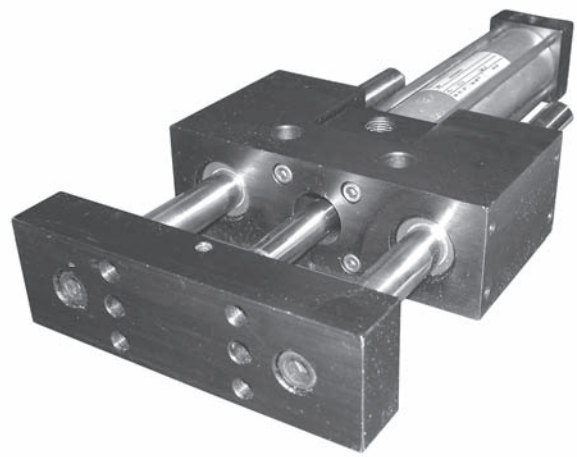

Technical data

NFPA tie rod cylinder
Bore sizes: 1-1/2" and 2"
Operating pressure: 250 psi max.
Temperature range: -20°F to 200°F (-29°C to 107°C)
Porting: 3/8 NPT
Ecology piston seals available (fixed cushion, adjustable or extra long Decel-Air" cushions)
Universal mounting (sleeve nut construction): Ease of cylinder removal (modular)

Linear thruster materials of construction

Body and tooling plate: Anodized aluminum alloy.
Guide rods: Hardened high carbon bearing quality steel.
Bushings: Composite (Teflon lined) self-lubricating or linear roller bearing.
Felt washers: oil impregnated
Retaining rings: to ensure bearing location.
Alignment coupler: carbon steel

Cylinder materials of construction

Piston rod: Chrome plated high strength carbon steel
Tie rods: High strength carbon steel
Seals: Nitrile piston, piston rod and tube seals, Urethane piston rod wiper.
Wearband: Teflon and graphite composite
Cylinder tube: Aluminum with hardcoat anodize
Rod bearing: Oil impregnated sintered iron
Endcaps: A and EA Series cylinder - aluminum
J and EJ Series cylinder - steel

Decel-Air Cushions

Norgren's Decel cushioned cylinder was designed for applications where high velocity, low mass, material function or machine function is required, and where the kinetic energy to be absorbed during cushioning exceeds the parameters of standard cylinders equipped with Ecology piston seals and fixed or adjustable cushions. Decel cushions employ longer-than-standard air cushions to assist our Impact Dampening Piston Seal.

Energy Absorption Capacity of the Impact Dampening Seals

***Usable Pounds Stoppable at the Following Piston Speeds**

This chart features the energy absorption capacity of the impact dampening piston seals with Non-Adjustable cushions.

	1-1/2" Bore				2.0" Bore			
	Load (LBS.) Short Body		Load (LBS.) Long Body		Load (LBS.) Short Body		Load (LBS.) Long Body	
Velocity In./Sec	Standard Guide Shaft	Oversize Guide Shaft	Standard Guide Shaft	Oversize Guide Shaft	Standard Guide Shaft	Oversize Guide Shaft	Standard Guide Shaft	Oversize Guide Shaft
6	151.3	149.1	150.8	148.2	267.0	261.9	265.7	259.4
12	34.1	31.9	33.6	31.0	59.6	54.5	58.3	52.0
18	12.4	10.2	11.9	9.3	7.8	16.1	20.0	13.6
24	4.9	2.7	4.44	1.8	7.8	2.7	6.5	0.2
30	1.3	0	0	0	1.5	0	0.2	0.0

*The weight of the cylinder piston has been deducted from the figures shown above.
Note: The use of Viton® Seals limits the absorption of the impact dampening seals by 50%.
NOTE: The weight of a tooling plate, guide rods, and 1 extend and 1 retract stop collar has been added.
(Guide rod weight is basd on a 6.0" stroke cylinder.)

LS Series Thrusters

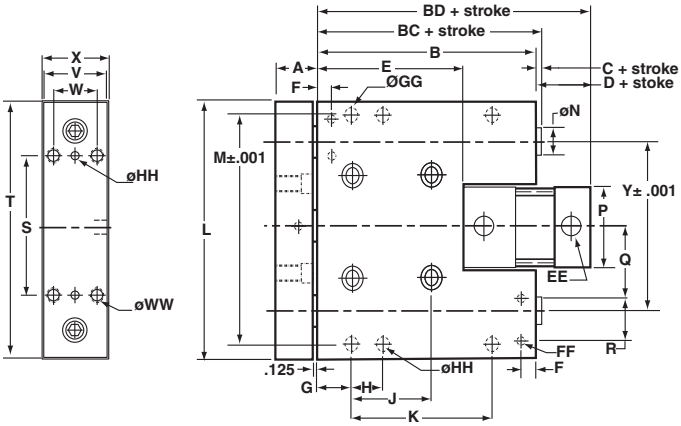

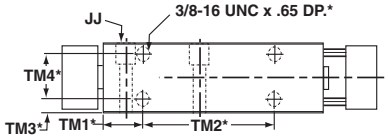

*Dimensions apply to TM option only

Dimensional data

Dimension	Size 3 (1-1/2" Bore)		Size 4 (2" Bore)	
	Long body	Short body	Long body	Short body
A	1.200	1.200	1.450	1.450
AA	2.375	NA	3.125	NA
B	5.765	3.650	8.000	5.000
BD	7.375	5.150	8.385	5.385
C	0.160	0.160	0.175	0.175
BC	5.925	3.810	8.175	5.175
D	1.450	1.340	0.385	0.385
E	3.750	1.500	4.760	1.760
EE	3/8 NPT	3/8 NPT	3/8 NPT	3/8 NPT
F	0.291	0.291	0.447	0.447
FF	1/4-20 x .40	1/4-20 x .40	1/4-20 x .50	1/4-20 x .50
G	0.875	0.875	1.000	1.000
GG	3/8-16 x .75DP	3/8-16 x .75DP	3/8-16 x .75DP	3/8-16 x .75DP
H	0.875	0.875	1.500	1.500
HH	.3764 x .47DP	.3764 x .47DP	.3764 x .50DP	.3764 x .50DP
J	2.375	2.375	3.125	3.125
JJ	.41thru .59 C/B x .66DP		.53 thru .81 C/B x .66DP	
K	4.000	1.750	6.000	3.000
L	6.450	6.450	8.380	8.380
M	5.875	5.875	7.750	7.750
N (Standard)	0.750	0.750	1.000	1.000
N (Oversize)	1.000	1.000	1.375	1.375
P	2.000	2.000	2.500	2.500
Q	1.775	1.775	2.265	2.265
R	1.063	1.063	1.375	1.375
S	2.375	2.375	3.125	3.125
T	6.550	6.550	8.500	8.500
TM1*	1.313	1.313	1.500	1.500
TM2*	3.125	0.875	5.000	2.000
TM3*	0.350	0.350	0.375	0.375
TM4*	1.500	1.500	2.000	2.000
V	2.000	2.000	2.500	2.500
W	1.300	1.300	1.625	1.625
WW	3/8-16	3/8-16	1/2-13	1/2-13
X	2.200	2.200	2.750	2.750
Y	4.250	4.250	5.750	5.750
Z	2.375	2.375	3.125	3.125
ZZ	0.875	0.875	1.000	1.000

LS product ordering information

LS	3	A	3	3	S	S	C	S	- Stroke - Options
1	2	3	4	5	6	7	8	9	

Maximum Stroke

	size 3 (1-1/2" bore)	size 4 (2" bore)
short body	18"	22"
long body	24"	28"

1 - Product

LS	Linear slide unit

2 - Size

3	1-1/2"
4	2"

3 - Cylinder Type

A	aluminum (NFPA tie rod)
EA	aluminum (NFPA tie rod Ecology Seal
J	steel (NFPA tie rod)
EJ	steel (NFPA tie rod Ecology Seal

4- Cushions - Extend Stroke

3	non-cushioned*
5	fixed cushions
7	adjustable cushions**
9	decel adjustable cushions**

5 - Cushions - Retract Stroke

3	non-cushioned*
5	fixed cushions
7	adjustable cushions**
9	decel adjustable cushions**

6 - Slide Body Width

S	standard

7 - Slide Body Length

S	short
L	long

8 - Guide Rod Bearing Type

C	composite
R	Roller +, ++

9 - Guide Rod Diameter

S	standard
O	oversize

Options

AE = stroke adjustment (collar & bumper) - extend stroke
AR = stroke adjustment (collar & bumper) - retract stroke
CR = corrosion resistance (includes linear slide and cylinder)
GL = guide rod lubrication (includes oiler cups installed)
GM = guide rod lubrication modification for oiler cups
L() = non-standard port location
ME = shock absorber mounting block - extend stroke
MR = shock absorber mounting block- retract stroke
N() = non-standard adjustable cushion needle location
P() = non-standard port size
(down one size = 1/4 NPT, up one size = 1/2 NPT)
PS = magnetic piston (cylinder)
PX() = tooling plate extension
TM = side tapped mounting
WC = linear thruster assembly without cylinder
WS = replacement cylinder without slide
V = high temperature viton seals

* Non-cushioned cylinders will have U-cup seals as standard. Ecology seals are not available as non-cushioned.
** Standard cushion adjustment location is side 1 and adds 1" to the overall length of the cylinder per end with standard port sizes.
+ Roller bearings are not available with oversized guide rods.
++ Roller bearing not available with CR (corrosion resistance) option.

LS Series Thrusters

Load and Deflection Graphs

1-1/2" bore, 3/4 inch guide rod, short body, composite bearing

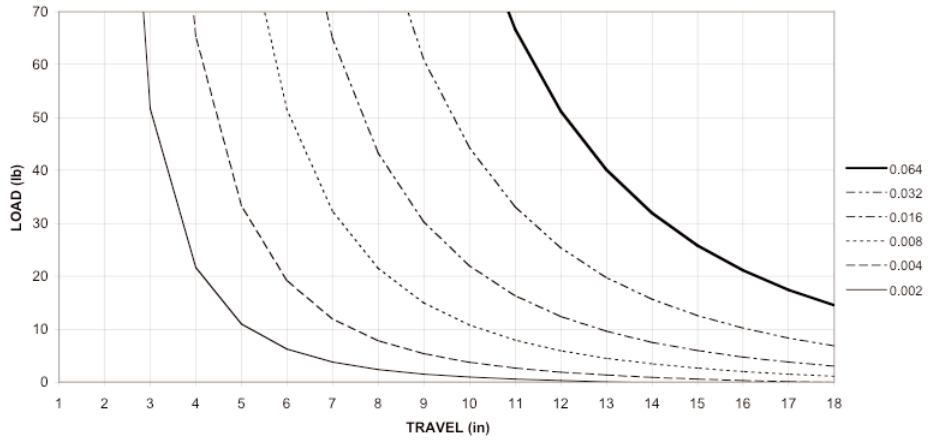

1-1/2" bore, 3/4 inch guide rod, short body, roller bearing

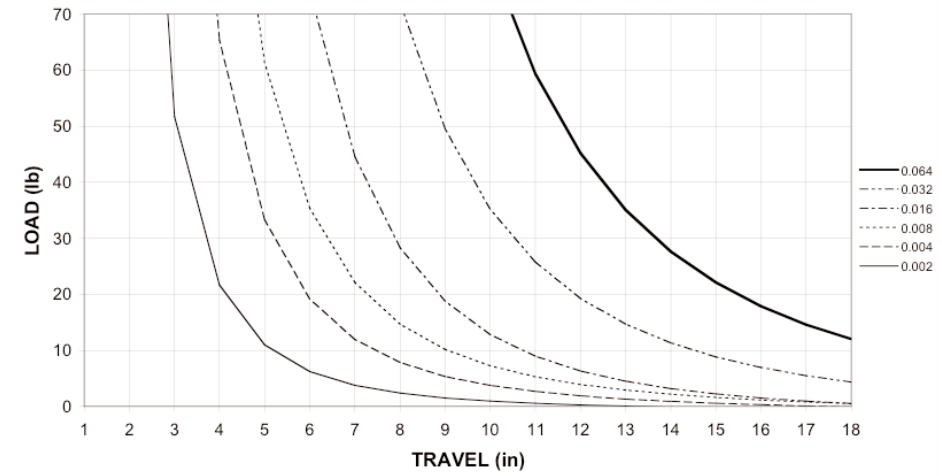

1-1/2" bore, 1 inch guide rod, short body, composite bearing

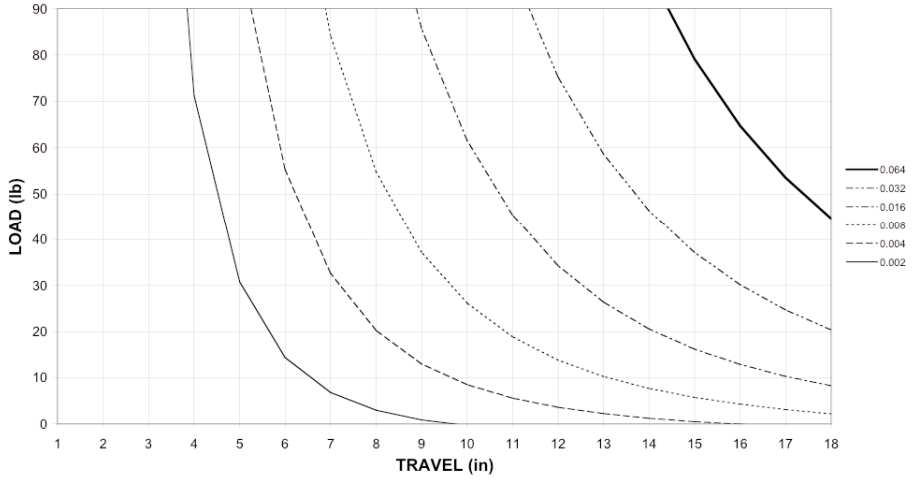

Load and Deflection Graphs

1-1/2" bore, 3/4 inch guide rod, long body, roller bearing

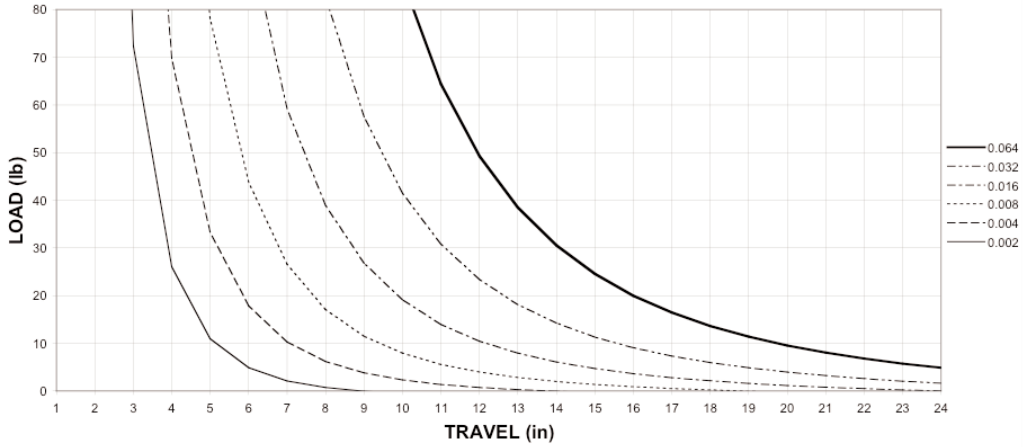

1-1/2" bore, 3/4 inch guide rod, long body, composite bearing

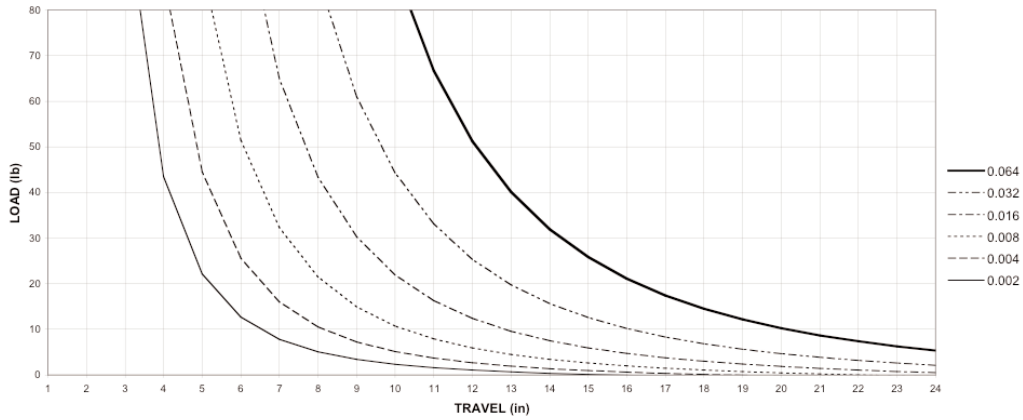

1-1/2" bore, 1 inch guide rod, long body, composite bearing

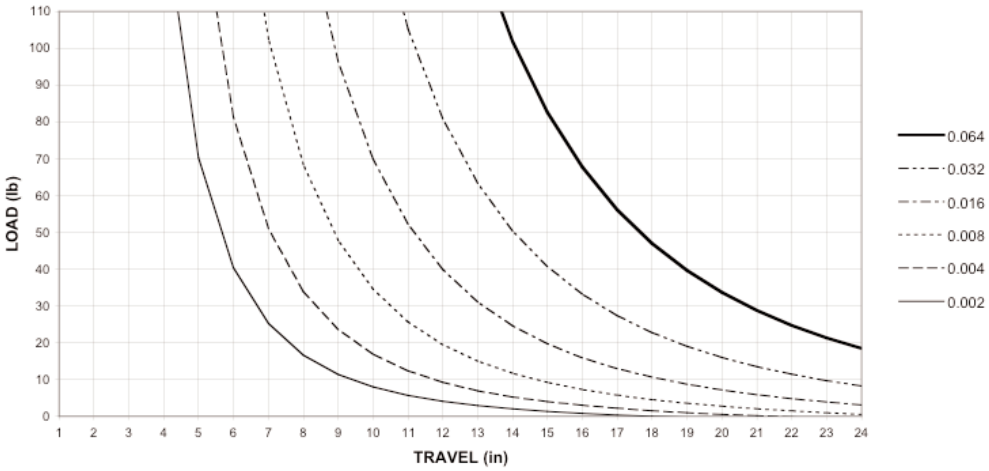

LS Series Thrusters

Load and Deflection Graphs

2.0" bore, 1 inch guide rod, long body, composite bearing

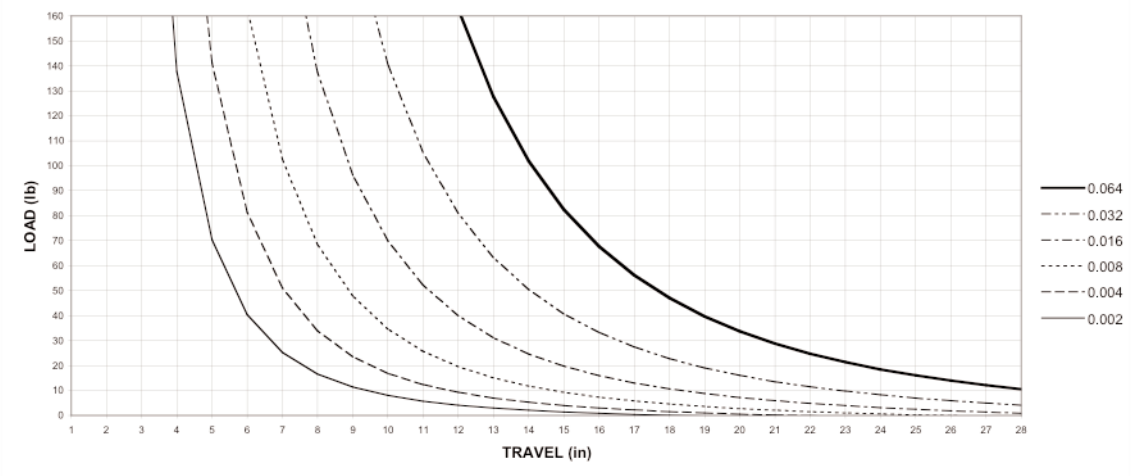

2.0" bore, 1 inch guide rod, long body, roller bearing

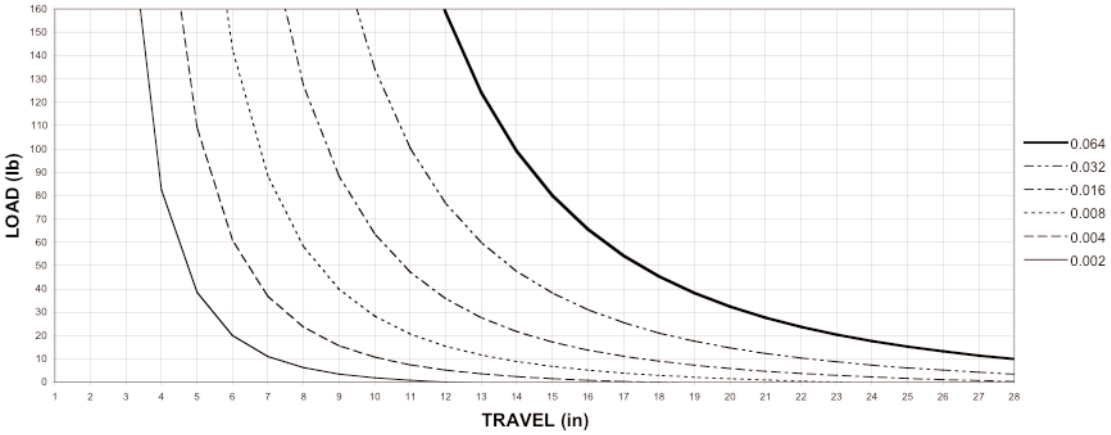

2.0" bore, 1-3/8 inch guide rod, long body, composite bearing

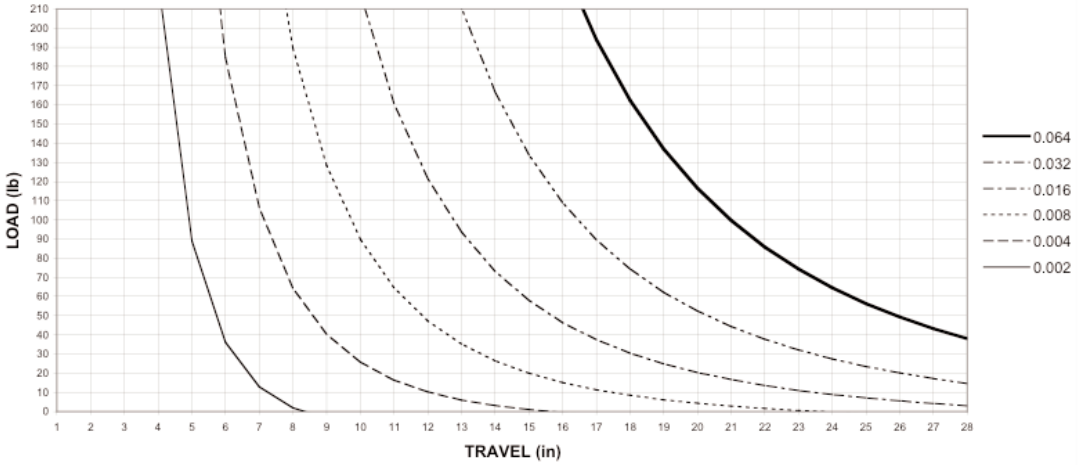

LS Series Thrusters

Load and Deflection Graphs

2.0" bore, 1 inch guide rod, short body, roller bearing

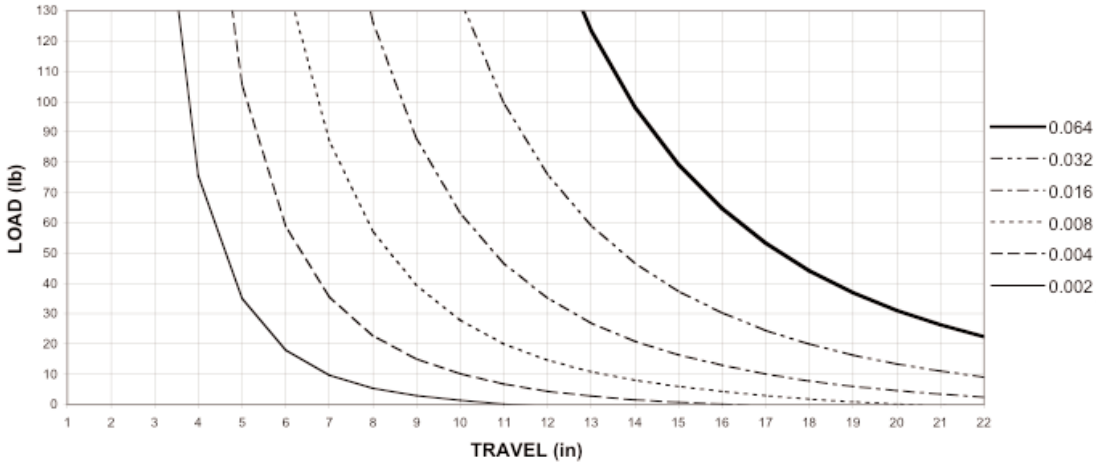

2.0" bore, 1 inch guide rod, short body, composite bearing

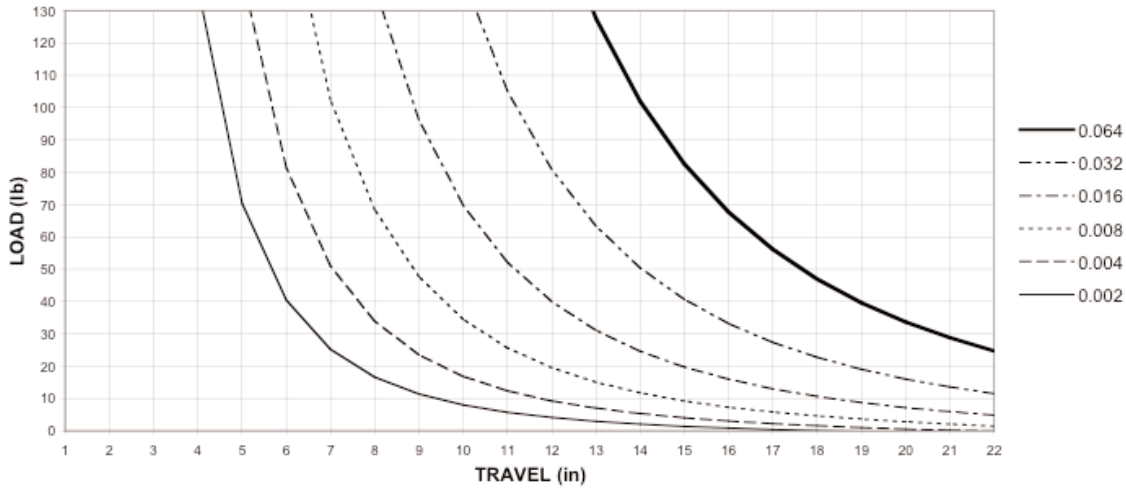

2.0" bore, 1-3/8 inch guide rod, short body, composite bearing

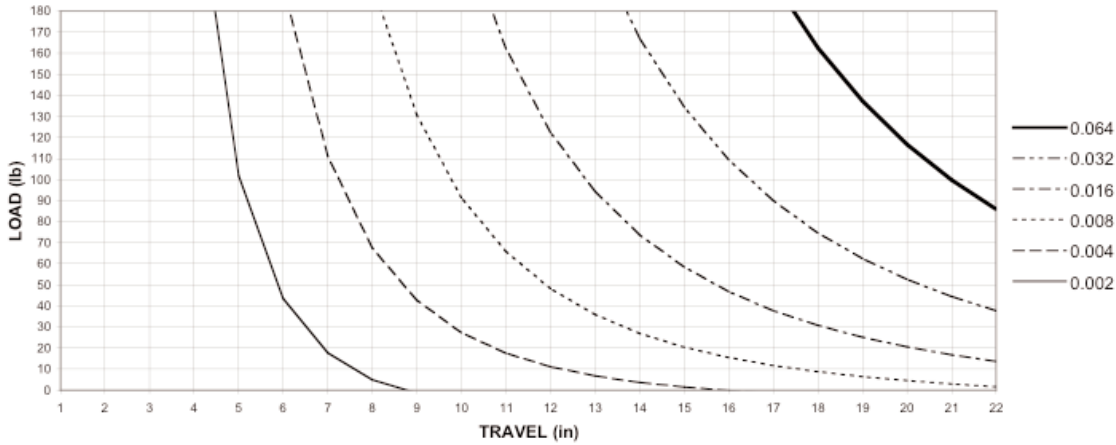

Series SS Actuators

Series D Low Friction Option

1-1/8" bore size

Precision machined 300 Series stainless steel components.
Cylinders rated to 250 PSI air, 400 PSI hydraulic (non-shock).
Designed for non-lube service.
Switches available on all bore sizes.

Technical data

Operating Temperatures:

Series SS	-40°F to 200°F (-40°C to 93°C)
Series D	-20°F to 250°F (-29°C to 121°C)
w/Viton Seals	-20°F to 400°F (-29°C to 204°C)

Operating Pressure:

250 PSIG Air (17.2 Bar)
400 PSIG Hydraulic (27.6 Bar) non-shock

Bore Sizes:

1-1/8"

Supply:

Filtered compressed air to 250 PSI
Petroleum based hydraulic fluid to 400 PSI

Lubrication: None required

Norgren Air Cylinders are rated for "no lube added" service. All internal components are lubricated at time of assembly with a Teflon® based grease.

Materials:

Head and End Caps: 304 stainless steel
Tube: 304 stainless steel
Piston Rod: hard chrome plated 303 stainless steel
Piston: Aluminum alloy with Teflon® composite wearband
Rod Bearings: 304 stainless steel with Teflon® composite wearband
Seals: urethane rod seal and wiper, nitrile piston seals
Tie Rods: 303 stainless steel

Options selector

★★★★★★-★★/★★★★★

Series

S	Series SS
D	Series D*

Single Rod End	Bore	Double Rod End
B	1-1/8"	P

Full Strokes Inches in

0" Stroke	00
1" Stroke	01
2" Stroke	02
3" Stroke	03
4" Stroke	04
5" Stroke	05
6" Stroke	06
. . .	. . .
99" Stroke	99
Special	XX

Fractional Increments of Stroke

0"	A	1/2"	J
1/16"	B	9/16"	K
1/8"	C	5/8"	M
3/16"	D	11/16"	N
1/4"	E	3/4"	P
5/16"	F	13/16"	R
3/8"	G	7/8"	S
7/16"	H	15/16"	T
Special		X	

Rod Size & Style

Standard		Oversized	
Male KK	A	Male KK	H
Male CC**	B	Male CC	J
Female XX	D	Female XX	M
Special	X		

* D series built with Teflon seals.
**Standard Rod End 1-1/8" Bore (7/8-24)

No Options 00

Magnetic	
Piston Only	90
Special	98

For any cylinder modifications not listed use "98" and please specify.

Optional Seals

No Option	A
Viton Seals	1
Air/Oil Seal	3
Metallic Rod Scraper	5
Ecology piston seal	6
Special	X

Cushions

Needle Position	1	2†	3	4
No Cushions			A	
Head Only	B	C	D	E
Cap Only	G	H	J	K
Head and Cap	N	M	P	R
Fixed		U		
Special		X		

†Standard position

Ports

Position	1†	2	3	4
Standard	A	B	C	D
Special		X		

†Standard position

Mounting Options

Basic (MX0)	01	Fixed Eye (MP3)	17
Bolt Thru (MS8)	03	Side Tap (MS9)	22
Front Flange (MF7)	04	Head Face (MR1)	30
Rear Flange (MF2)	05	Special	XX

Port and Cushion Needle Positions
(As viewed from rod end)

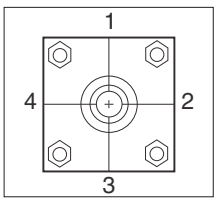

Series SS Actuators

1-1/8" bore size

1-1/8" Cylinder with 01 (MX0) Basic

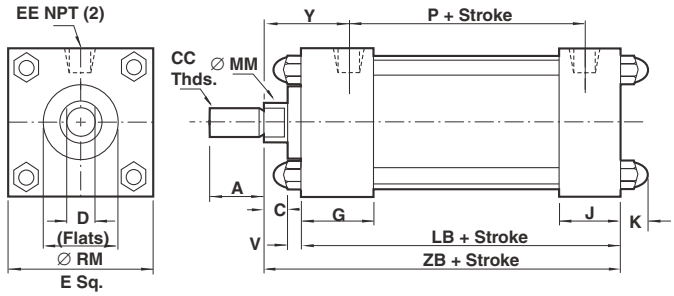

Standard and optional rod ends

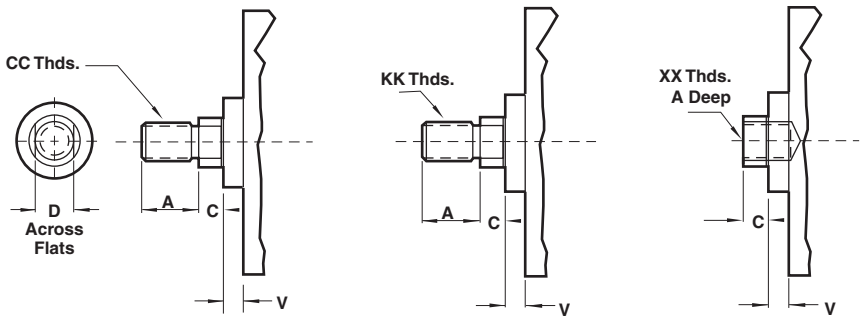

Style B & J (Standard Male) | **Style A & H** (Optional Male) | **Style D & M** (Optional Female)

Dimension		01 (MX0) Basic	03 (MS8) Bolt Thru	04 (MF7) Front Flange	05 (MF2) Rear Flange
ø Rod	Std.	3/8"	.3/8"	.3/8"	.3/8"
	O.S.	1/2"	.1/2"	.1/2"	.1/2"
A	Std.	.625	.625	.625	.625
	O.S.	.750	.750	.750	.750
C		.250	.250	.250	.250
CC	Std.	3/8 - 24	3/8 - 24	3/8 - 24	3/8 - 24
	O.S.	1/2 - 20	1/2 - 20	1/2 - 20	1/2 - 20
D	Std.	.312	.312	.312	.312
	O.S.	.437	.437	.437	.437
E		1.500	1.500	1.500	1.500
EE		.125	.125	.125	.125
G		.875	.875	.875	.875
J		.625	.625	.625	.625
K		.400	.400	.400	–
KK	Std.	5/16 - 24	5/16 - 24	5/16 - 24	5/16 - 24
	O.S.	7/16 - 20	7/16 - 20	7/16 - 20	7/16 - 20
LB		2.250	2.250	2.250	2.250
MM	Std.	.370	.370	.370	.370
	O.S.	.495	.495	.495	.495
P		1.375	–	1.375	1.375
RM	Std.	.750	.750		–
	O.S.	1.000	1.000	–	–
V		.125	.125	.125	.125
XX	Std.	1/4 - 28	1/4 - 28	1/4 - 28	1/4 - 28
	O.S.	3/8 - 24	3/8 - 24	3/8 - 24	3/8 - 24
Y		.938	–	.938	.938
ZB		2.625	2.625	2.625	–

NORGREN ENGINEERING ADVANTAGE

Series SS Actuators

1-1/8" bore size

1-1/8" Cylinder with 03 (MS8) Bolt Thru

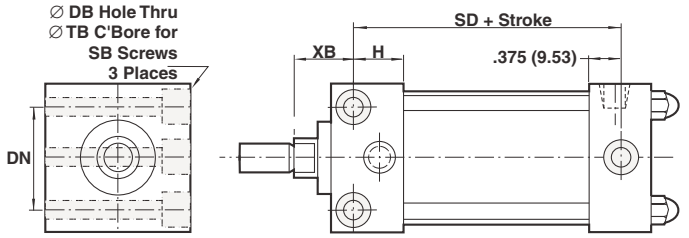

03 (MS8)	Bolt Thru
DB	.203
DN	1.000
SB	#10
SD	1.750
XB	.625

1-1/8" Cylinder with 04 (MF7) Front Flange

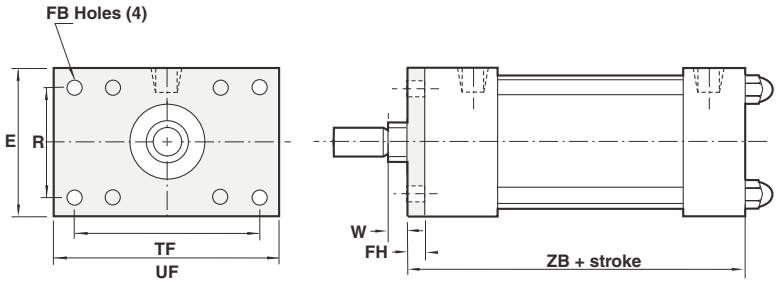

04 (MF7) Front Flange	
FB	.219
FH	.250
E	1.500
R	1.000
W	.125
TF	2.000
UF	2.500
ZB	2.625

1-1/8" Cylinder with 05 (MF2) Rear Flange

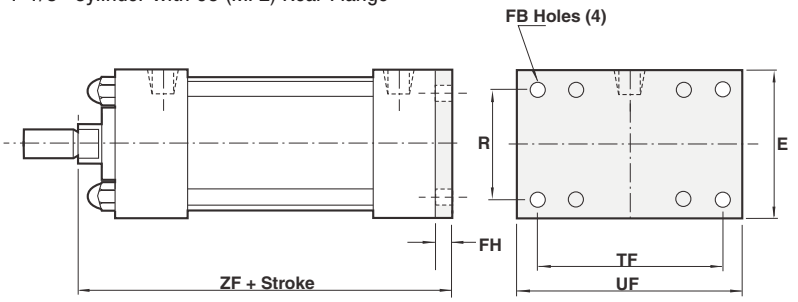

05 (MF2) Rear Flange	
E	1.500
FB	.219
FH	.250
R	1.000
TF	2.000
UF	2.500
ZF	2.875

17 (MP3) Fixed eye

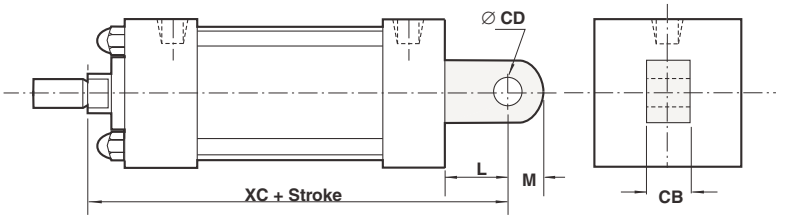

17 (MP3) Fixed eye	
CB	.375
CD	.375
L	.437
M	.375
XC	3.062

22 (MS9) Side tap

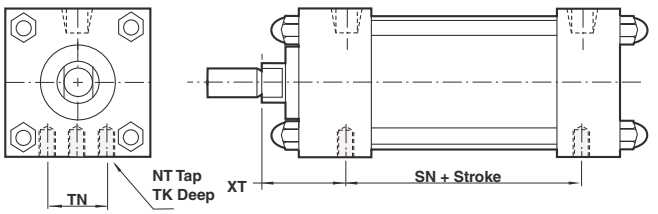

22 (MS9) Side tap	
NT	10-32
SN	1.750
TK deep	.250
TN	1.000
XT	.625

Series SS Actuators

1-1/8" bore size

30 (MR1) Head face

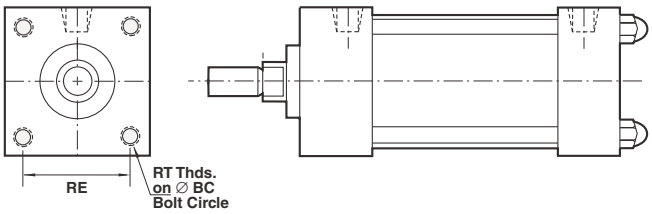

30 (MR1) Head face	
BC	1.593
RE	1.125
RT	10-32

Double rod with 01 (MX0) basic

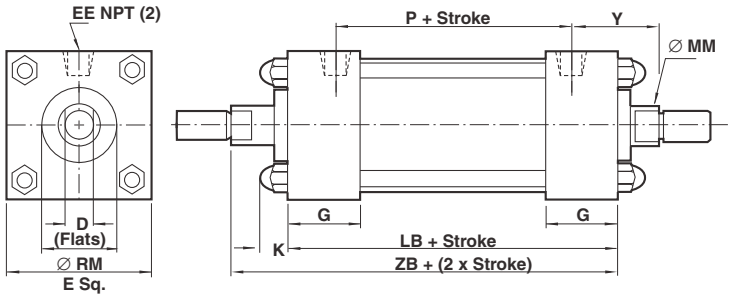

Double rod end cylinder with 01 (MX0) basic		
D	Std.	.312
	O.S.	.437
E		1.500
EE		.125
G		.875
K		.400
LB		2.250
MM	Std.	.370
	O.S.	.495
P		1.375
RM	Std.	.750
	O.S.	1.000
Y		.938
ZB		3.250

Rod eye 303 stainless steel w/jam nut
3/8-24 pn S-97-225, 1/2-20 pn S-97-225A

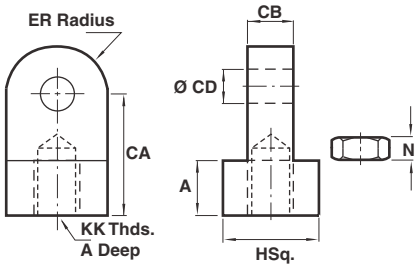

Rod Eye	S-97-225*	S-97-225A
A	.437	.437
CA	.875	.875
CB	.375	.375
CD	.375	.375
ER	.375	.375
H	.750	.750
KK	3/8-24	1/2-20
N	.219	.312

Pivot pin 303 stainless steel, pn S-96-225A

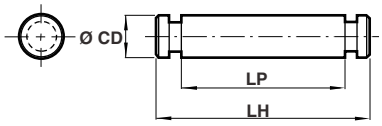

Pivot pin	
CD	.375
LH	1.250
LP	1.032

**Use with S-91-225, S-97-225

Clevis bracket 304 stainless steel P/N S-91-225

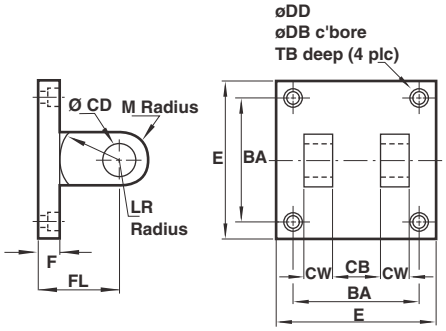

Clevis bracket	
BA	1.125
CB	.375
CD	.375
CW	.250
DB	.328
DD	.203
E	1.50
F	.500
FL	1.125
LR	.625
M	.375
TB	.260

NFPA Rod alignment coupler, pn SC-1-06

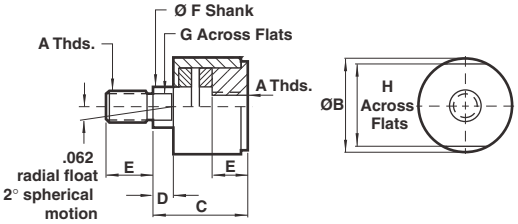

Made of 303 Stainless Steel, the Rod Alignment Coupler allows 1/16" of radial float and 2° of spherical movement.

This prevents cylinder binding due to misalignment thus extending bearing and seal life, and permits greater tolerance between the center line of the cylinder and mating part for simplified installation.

Rod alighnment coupler	
A	3/8 – 24
B	.875
C	1.250
D	.250
E	.625
F	.375
G	.312
H	.750
Maximum pull	1,375

NORGREN
ENGINEERING ADVANTAGE

Series SS NFPA Interchangeable Actuators

Series D Low Friction Option

1-1/2" to 8" bore sizes

Precision machined 300 Series stainless steel components.
Cylinders rated to 250 PSI air, 400 PSI hydraulic (non-shock).
Designed for non-lube service.
Switches available on all bore sizes.

Technical data

Operating Temperatures:

Series SS	-20°F to 200°F (-29°C to 93°C)
Series D	-20°F to 250°F (-29°C to 121°C)
w/Viton Seals	-20°F to 400°F (-29°C to 204°C)

Operating Pressure:

250 PSIG Air (17.2 Bar)
400 PSIG Hydraulic (27.6 Bar) non-shock

Bore Sizes:

1-1/8", 1-1/2", 2", 2-1/2", 3-1/4", 4", 5", 6", 8"

Supply:

Filtered compressed air to 250 PSI
Petroleum based hydraulic fluid to 400 PSI

Lubrication: None required

Norgren Air Cylinders are rated for "no lube added" service. All internal components are lubricated at time of assembly with a Teflon® based grease.

Materials:

Head and End Caps: 304 stainless steel
Tube: 304 stainless steel
Piston Rod: hard chrome plated 303 stainless steel
Piston: Aluminum alloy with Teflon® composite wearband
Rod Bearings: 304 stainless steel with Teflon® composite wearband
Seals: urethane rod seal and wiper, nitrile piston seals
Tie Rods: 303 stainless steel

Options selector

S C 0 4 J - A 0 1 - A A 6 0 0

Series

S	Series SS
D	Series D*

Bore	Single Rod End	Double Rod End
1-1/2"	C	Q
2"	D	R
2-1/2"	E	S
3-1/4"	F	T
4"	G	U
5"	L	Y
6"	J	W
8"	M	Z

Full Strokes Inches in

0" Stroke	00
1" Stroke	01
2" Stroke	02
3" Stroke	03
4" Stroke	04
5" Stroke	05
6" Stroke	06
. . .	. . .
99" Stroke	99
Special	XX

Fractional Increments of Stroke

0"	A	1/2"	J
1/16"	B	9/16"	K
1/8"	C	5/8"	M
3/16"	D	11/16"	N
1/4"	E	3/4"	P
5/16"	F	13/16"	R
3/8"	G	7/8"	S
7/16"	H	15/16"	T
Special		X	

Rod Size & Style

Standard		Oversized	
Male KK	A	Male KK	H
Male CC**	B	Male CC	J
Full Dia. Thd.	C	Full Dia. Thd.	K
Female XX	D	Female XX	M
Studded	E	Studded	N
Special	X		

* D series built with Teflon seals.
**On 1-1/2", 2" & 2-1/2" Bore Sizes with 5/8" Rod, CC = 7/16 - 20 (NFPA)

No Options 00
Magnetic piston 90

Optional Seals

No Option	A
Viton Seals	1
Air/Oil Seal	3
Metallic Rod Scraper	5
Ecology piston seal	6
Special	X

Cushions

Needle Position	1	2†	3	4
No Cushions			A	
Head Only	B	C	D	E
Cap Only	G	H	J	K
Head and Cap	N	M	P	R
Fixed		U		
Special		X		

†Standard position

Ports

Position	1†	2	3	4
Standard	A	B	C	D
Oversized*	E	G	H	J
Special		X		

†Standard position
*NFPA

Mounting Options

Basic (MX0)	01	Head Square (ME3)*	10
Bottom Tap (MS4)	02	Cap Square (ME4)*	11
Front Flange (MF1)	04	Head Trunnion (MT1)	15
Rear Flange (MF2)	05	Cap Trunnion (MT2)	16
Cap Fixed Clevis (MP1)	06	Special	XX

*8" Bores only

Port and Cushion Needle Positions
(As viewed from rod end)

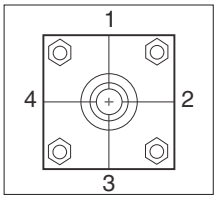

Series SS NFPA Interchangeable Actuators

1-1/2" to 8" bore sizes

1 Piston Seals: Lip-type nitrile seals are pressure energized and wear compensating. Their excellent lubrication retention characteristics lower seal friction and ensure long life.

2 Piston: Solid aluminum alloy, light-weight for low inertia, yet strong.

3 Head/Cap: Precision machined from solid corrosion-resistant 304 stainless steel bar.

4 Rod Wiper: Lip-type urethane aggressively wipes foreign material from piston rod and enhances rod seal life.

5 Rod Seals: Rounded lip-type urethane is pressure energized and wear compensating.

6 Piston Rod: 303 stainless steel, 40,000 PSI minimum yield, hard chrome plated, ground and polished.

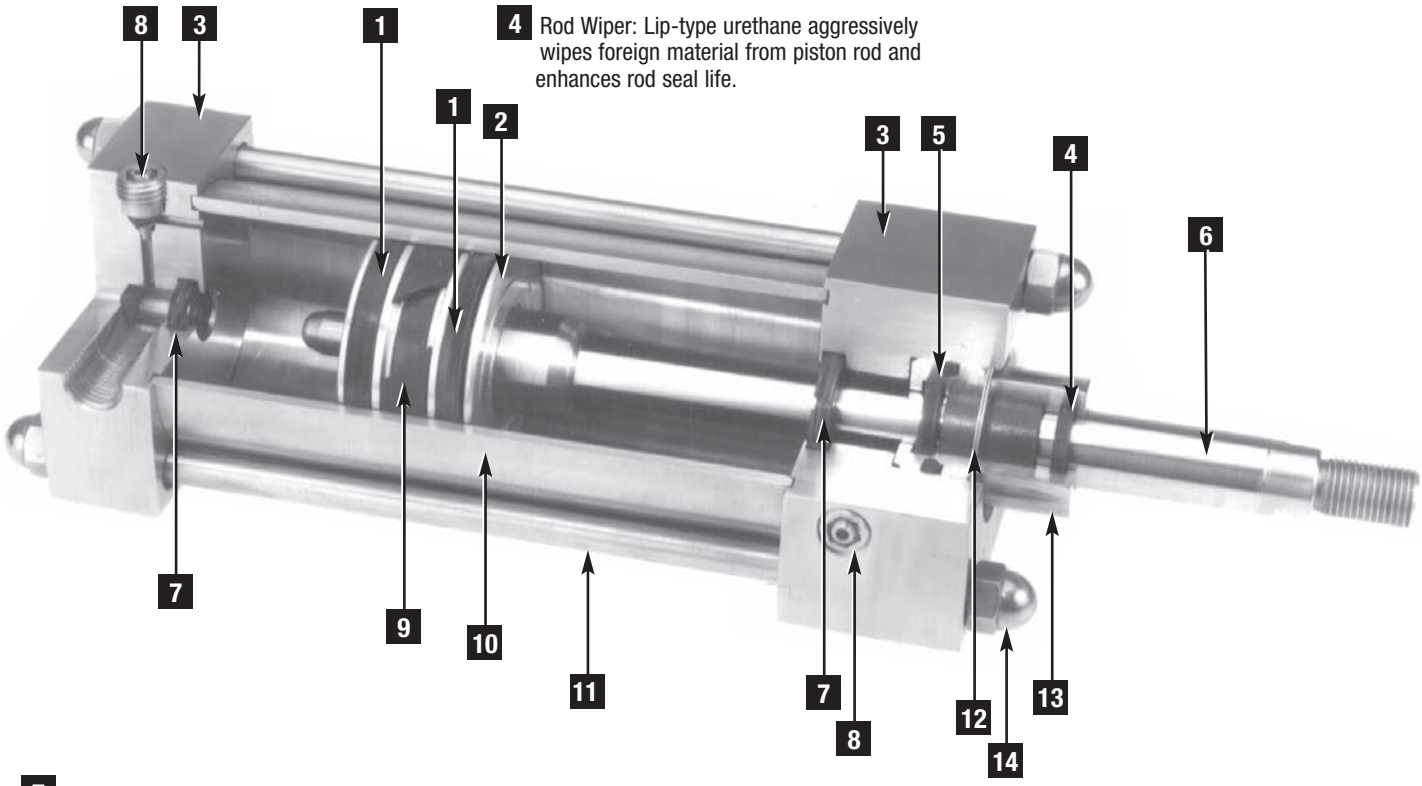

7 Ultra Cushion®: State-of-the-art design features a unique, one-piece, nitrile compound seal, captured within a precision machined groove. Linear and radial "float" of cushion seal eliminates misalignment. Ultra Cushions provide exceptionally fast "out of cushion" stroke reversal. (Head and Cap Cushions are optional.)

8 Adjustable Captive Cushion Needle Allows for safe and precise adjustment under pressure.

9 Wear Strip: Teflon® composite for minimum friction, maximum wear and side load resistance.

10 Tube: Corrosion-resistant 304 stainless steel.

11 Tie Rods: High-strength 303 stainless steel maintains compression on tube end seals.

12 Retainer: Stainless steel snap ring securely retains bushing in head.

13 Rod Bearings: Machined from 304 stainless steel, with a Teflon® composite wear band insert that eliminates metal-to-metal contact.

14 Acorn Nut: Tie rod threads are covered by stainless steel acorn nuts.

Series D

Series D cylinders are designed for extremely smooth stroke performance on applications requiring very slow extension and/or retraction speeds. They are identical to the Series SS in design, function and dimensions, but have "ELF" carboxylated nitrile piston seals, rod seals, and rod wipers. "ELF" carboxylated nitrile is a blend of Teflon® and other low friction additives that are molded into the substrate of the base seal material. Incorporating this compound in the dynamic seals of the cylinder results in diminished friction, lower breakaway and superior stroke performance.

Features:

- Extra smooth performance throughout the entire stroke of the cylinder.• NFPA interchangeable.
- Cylinders rated to 250 PSI air.

NORGREN
ENGINEERING ADVANTAGE

Series SS NFPA Interchangeable Actuators

1-1/2" to 8" bore sizes

Standard Cylinder Dimensions

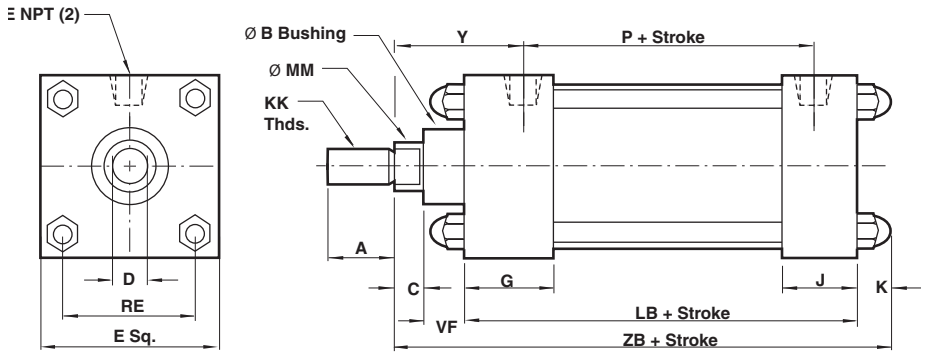

Standard & Optional Rod Ends

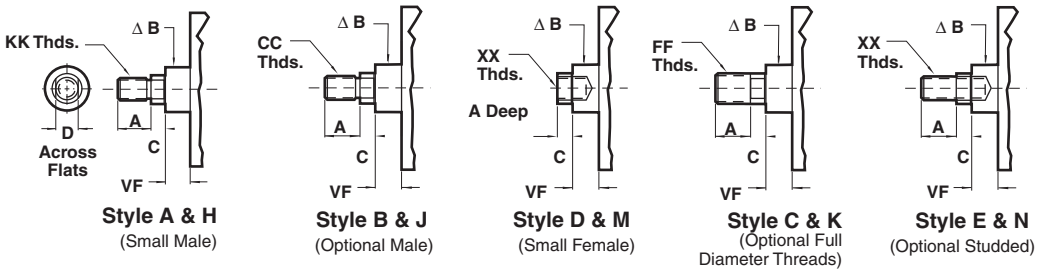

Bore		1–1/2"	2"	2–1/2"	3–1/4"	4"	5"	6"	8"
ø Rod	Std.	5/8"	5/8"	5/8"	1"	1"	1"	1-3/8"	1-3/8"
(MM)	O.S.	1"	1"	1"	1-3/8"	1-3/8"	1-3/8"	1-3/4"	1-3/4"
A	Std.	0.75	0.75	0.75	1.125	1.125	1.125	1.625	1.625
	O.S.	1.125	1.125	1.125	1.625	1.625	1.625	2.000	2.000
B +.000	Std.	1.125	1.125	1.125	1.500	1.500	1.500	2.000	2.000
-.002	O.S.	1.500	1.500	1.500	2.000	2.000	2.000	2.375	2.375
C	Std.	0.375	0.375	0.375	0.5	0.5	0.5	0.625	0.625
	O.S.	0.5	0.5	0.5	0.625	0.625	0.625	0.75	0.75
CC	Std.	7/16 – 20	7/16 – 20	7/16 – 20	7/8 –14	7/8 –14	7/8 –14	1-1/4 – 12	1-1/4 – 12
	O.S.	7/8 –14	7/8 –14	7/8 –14	1-1/4 – 12	1-1/4 – 12	1-1/4 – 12	1-1/2 – 12	1-1/2 – 12
D	Std.	0.5	0.5	0.5	0.812	0.812	0.812	1.125	1.125
	O.S.	0.812	0.812	0.812	1.125	1.125	1.125	1.5	1.5
E		2	2.5	3	3.75	4.5	5.5	6.5	8.5
EE	Std.	0.25	0.25	0.25	0.375	0.375	0.375	0.5	0.5
	O.S.	0.375	0.375	0.375	0.5	0.5	0.5	0.75	0.75
FF	Std.	5/8 – 18	5/8 – 18	5/8 – 18	1 – 14	1 – 14	1 – 14	1-3/8 – 12	1-3/8 – 12
	O.S.	1 –14	1 –14	1 –14	1-3/8 – 12	1-3/8 – 12	1-3/8 – 12	1-3/4 – 12	1-3/4 – 12
G		1.5	1.5	1.5	1.75	1.75	1.75	2	2
J		1	1	1	1.25	1.25	1.5	1.5	1.5
K		0.469	0.531	0.531	0.625	0.625	0.83	0.83	1
KK	Std.	1/2 – 20	1/2 – 20	1/2 – 20	3/4 – 16	3/4 – 16	3/4 – 16	1 – 14	1 – 14
	O.S.	3/4 – 16	3/4 – 16	3/4 – 16	1 – 14	1 – 14	1 – 14	1-1/4 – 12	1-1/4 –12
LB		3.625	3.625	3.75	4.25	4.25	4.5	5	5.125
P		2.125	2.125	2.25	2.625	2.625	2.875	3	3.125
RE		1.43	1.84	2.19	2.76	3.32	4.1	4.88	6.435
VF	Std.	0.625	0.625	0.625	0.875	0.875	0.875	1	1
	O.S.	0.875	0.875	0.875	1	1	1	1.125	1.125
XX	Std.	7/16 – 20	7/16 - 20	7/16 - 20	3/4 - 16	3/4 - 16	3/4 - 16	1 - 14	1 - 14
	O.S.	3/4 – 16	3/4 – 16	3/4 – 16	1 – 14	1 – 14	1 – 14	1-1/4 – 12	1-1/4 – 12
Y	Std.	2	2	2	2.437	2.437	2.437	2.875	2.875
	O.S.	2.375	2.375	2.375	2.687	2.687	2.687	3.125	3.125
ZB	Std.	5.094	5.156	5.281	6.25	6.25	6.705	7.455	7.75
	O.S.	5.469	5.531	5.656	6.5	6.5	6.955	7.705	8

Norgren.com/usa – 303.794.2611 – help@amer.norgren.com

Series SS NFPA Interchangeable Actuators

1-1/2" to 8" bore sizes

02 (MS4) Bottom Tap

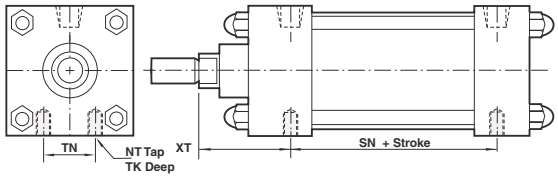

Bore		1-1/2"	2"	2-1/2"	3-1/4"	4"	5"	6"	8"
NT		1/4-20	5/16-18	3/8-16	1/2-13	1/2-13	5/8-11	3/4-10	3/4-10
SN		2.250	2.250	2.375	2.625	2.625	2.875	3.125	3.250
TK		.375	.500	.625	.750	.750	1.000	1.125	1.125
TN		.625	.875	1.250	1.500	2.062	2.687	3.250	4.500
XT	Std.	1.937	1.937	1.937	2.437	2.437	2.437	2.812	2.812
	O.S.	2.312	2.312	2.312	2.687	2.687	2.687	3.062	3.062

06 (MP1) Cap Fixed Clevis

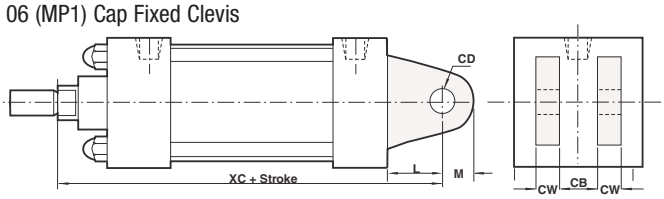

Bore		1-1/2"	2"	2-1/2"	3-1/4"	4"	5"	6"	8"
CB		.750	.750	.750	1.250	1.250	1.250	1.500	1.500
CD		.500	.500	.500	.750	.750	.750	1.000	1.000
CW		.500	.500	.500	.625	.625	.625	.750	.750
L		.750	.750	.750	1.250	1.250	1.250	1.500	1.500
M		.50	.50	.50	.75	.75	.75	1.000	1.000
XC	Std.	5.375	5.375	5.500	6.875	6.875	7.125	8.125	8.250
	O.S.	5.750	5.750	5.875	7.125	7.125	7.375	8.375	8.500

10 (ME3) Head Square
11 (ME4) Cap Square

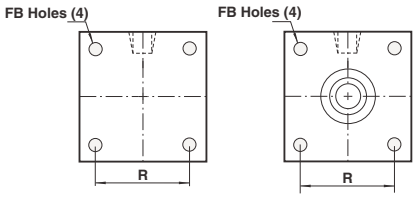

Bore	8"
FB	.687
R	7.570

04 (MF1) Front Flange

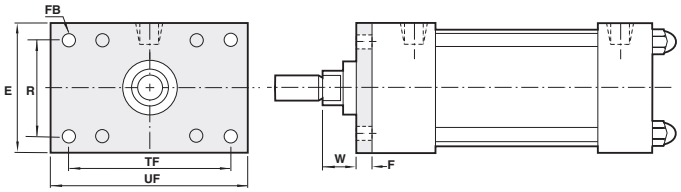

Bore		1-1/2"	2"	2-1/2"	3-1/4"	4"	5"	6"
E		2.000	2.500	3.000	3.750	4.500	5.500	6.500
FB		.312	.375	.375	.437	.437	.562	.562
G		1.500	1.500	1.500	1.750	1.750	1.750	2.000
F		.375	.375	.375	.625	.625	.625	.750
R		1.430	1.840	2.190	2.760	3.320	4.100	4.880
TF		2.750	3.375	3.875	4.687	5.437	6.625	7.625
UF		3.375	4.125	4.625	5.500	6.250	7.625	8.625
W	Std.	.625	.625	.625	.750	.750	.750	.875
	O.S.	1.000	1.000	1.000	1.000	1.000	1.000	1.125

05 (MF2) Rear Flange

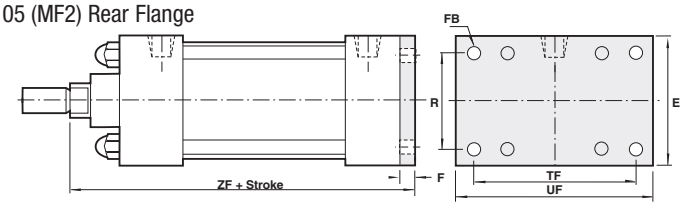

Bore		1-1/2"	2"	2-1/2"	3-1/4"	4"	5"	6"
E		2.000	2.500	3.000	3.750	4.500	5.500	6.500
FB		.312	.375	.375	.437	.437	.562	.562
G		1.500	1.500	1.500	1.750	1.750	1.750	2.000
F		.375	.375	.375	.625	.625	.625	.750
R		1.430	1.840	2.190	2.760	3.320	4.100	4.880
TF		2.750	3.375	3.875	4.687	5.437	6.625	7.625
UF		3.375	4.125	4.625	5.500	6.250	7.625	8.625
W	Std.	.625	.625	.625	.750	.750	.750	.875
	O.S.	1.000	1.000	1.000	1.000	1.000	1.000	1.125
ZF	Std.	5.000	5.000	5.125	6.250	6.250	6.500	7.375
	O.S.	5.375	5.375	5.500	6.500	6.500	6.750	7.625

15 (MT1) Head Trunnion

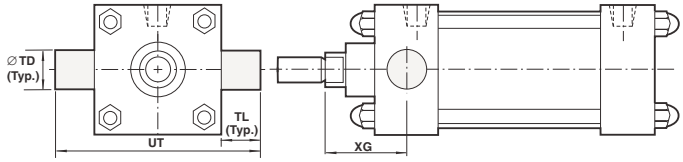

Bore		1-1/2"	2"	2-1/2"	3-1/4"	4"	5"	6"	8"
TD		1.000	1.000	1.000	1.000	1.000	1.000	1.375	1.375
TL		1.000	1.000	1.000	1.000	1.000	1.000	1.375	1.375
UT		4.000	4.500	5.000	5.750	6.500	7.500	9.250	11.250
XG	Std.	1.750	1.750	1.750	2.250	2.250	2.250	2.625	2.625
	O.S.	2.125	2.125	2.125	2.500	2.500	2.500	2.875	2.875

NORGREN ENGINEERING ADVANTAGE

Series SS Actuators

1-1/2" to 8" bore size

Double Rod End 01 (MX0) Basic

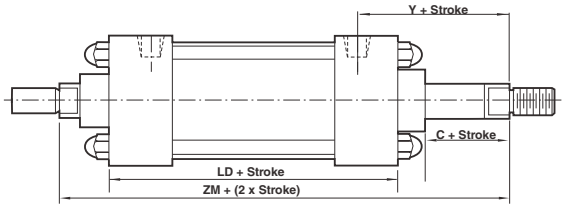

Bore		1-1/2"	2"	2-1/2"	3-1/4"	4"	5"	6"	8"
C	Std.	.375	.375	.375	.500	.500	.500	.625	.625
	O.S.	.500	.500	.500	.625	.625	.625	.750	.750
LD		4.125	4.125	4.250	4.750	4.750	5.000	5.500	5.500
Y	Std.	2.000	2.000	2.000	2.437	2.437	2.437	2.875	2.875
	O.S.	2.375	2.375	2.375	2.687	2.687	2.687	3.125	3.125
ZM	Std.	6.125	6.125	6.250	7.500	7.500	7.750	8.750	8.750
	O.S.	6.875	6.875	7.000	8.000	8.000	8.250	9.250	9.250

16 (MT2) Cap Trunnion

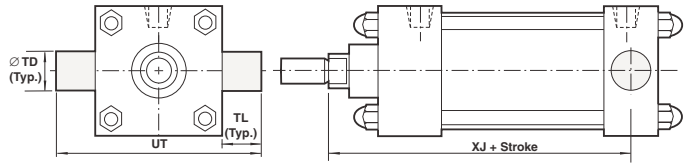

Bore		1-1/2"	2"	2-1/2"	3-1/4"	4"	5"	6"	8"
TD		1.000	1.000	1.000	1.000	1.000	1.000	1.375	1.375
TL		1.000	1.000	1.000	1.000	1.000	1.000	1.375	1.375
UT		4.000	4.500	5.000	5.750	6.500	7.500	9.250	11.250
XJ	Std.	4.125	4.125	4.250	5.000	5.000	5.250	5.875	6.000
	O.S.	4.500	4.500	4.625	5.250	5.250	5.500	6.125	6.250

Rod Clevis
303 Stainless Steel

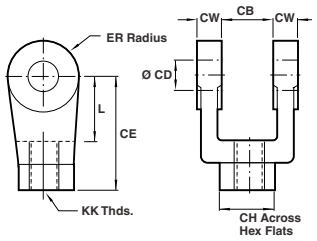

	S-92-03	S-92-065	S-92-12	S-92-16
CB	.750	1.250	1.500	2.000
CD	.500	.750	1.000	1.375
CE	1.500	2.375	3.125	4.125
CH	1.000	1.250	1.500	2.000
CW	.500	.625	.750	1.000
ER	.500	.750	1.000	1.375
KK	1/2-20	3/4-16	1-14	1-1/4 - 12
L	.750	1.250	1.500	2.125

NFPA Pin
303 Stainless Steel

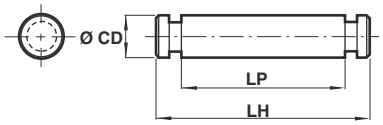

	S-96-03A	S-96-065A	S-96-12A	S-96-16A
CD	500	.750	1.000	1.375
LH	2.219	3.125	3.750	5.625
LP	1.875	2.750	3.250	4.375

Rod Alignment Coupler

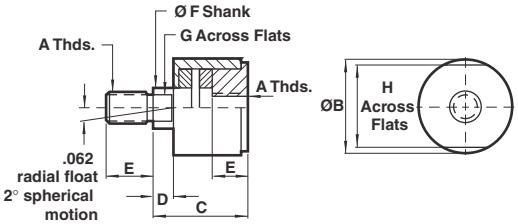

	SC-107	SC-1-08	SC-1-12	SC-1-16
A	7/16-20	1/2 – 20	3/4 – 16	1-14
B	1.250	1.250	1.750	2.500
C	2.000	2.000	2.312	2.937
D	.500	.500	.500	.500
E	.750	.750	1.125	1.625
F	.625	.625	.969	1.375
G	.563	.563	.812	1.156
H	1.125	1.125	1.500	2.250
Max Pull (lbs)	2,250	3,150	7,750	12,250

Made of 303 Stainless Steel, the Rod Alignment Coupler allows 1/16" of radial float and 2° of spherical movement.

Eye Bracket
303 Stainless Steel

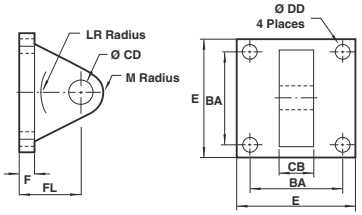

	S-89-03A	S-89-065A	S-89-12A
BA	1.625	2.562	3.250
CB	.750	1.250	1.500
CD	.500	.750	1.000
DD	.406	.531	.656
E	2.500	3.500	4.500
F	.375	.625	.750
FL	1.125	1.875	2.250
LR	.750	1.250	1.500
M	.500	.750	1.000

Series SS Actuators

1-1/2" to 8" bore sizes

Cylinder Force and Volume Charts

Extend Forces

Bore	Piston Area	PSI (bar)												Volume Cu Ft (cm3) Displacement per inch	
		40	(3)	60	(4)	80	(6)	100	(7)	150	(10)	200	(14)		
1-1/8"	.99	(6.41)	40	(177)	60	(265)	80	(354)	99	(442)	149	(664)	200	(890)	.00057	(16)
1-1/2"	1.77	(11.40)	71	(315)	106	(472)	142	(629)	177	(786)	266	(1179)	353	(1570)	.00102	(29)
2"	3.14	(20.27)	126	(559)	189	(839)	251	(1119)	314	(1398)	471	(2097)	628	(2793)	.00182	(52)
2-1/2"	4.91	(31.67)	196	(874)	295	(1311)	393	(1748)	491	(2185)	737	(3277)	982	(4368)	.00284	(80)
3-1/4"	8.30	(53.32)	332	(1477)	498	(2215)	664	(2953)	830	(3692)	1245	(5538)	1659	(7379)	.00480	(136)
4"	12.57	(81.07)	503	(2237)	754	(3355)	1005	(4473)	1257	(5592)	1886	(8388)	2513	(11178)	.00727	(206)
5"	19.64	(126.71)	785	(3491)	1178	(5240)	1571	(6988)	1964	(8736)	2946	(13104)	3928	(17472)	.01137	(322)
6"	28.27	(182.39)	1130	(5026)	1696	(7544)	2262	(10061)	2827	(12574)	4240	(18860)	5654	(25149)	.01837	(520)
8"	50.26	(324.26)	2010	(8940)	3015	(13411)	4020	(17881)	5026	(22356)	7539	(33533)	10052	(44711)	.02227	(631)

Deduct these Forces for Retract Strokes

Rod	Rod area	PSI (bar)												Volume cu ft (cm3) displacement per inch	
		40	(3)	60	(4)	80	(6)	100	(7)	150	(10)	200	(14)		
3/8"	.112	(.72)	5	(20)	7	(30)	9	(40)	11	(50)	17	(75)	22	(100)	.00007	(2)
1/2"	.196	(1.26)	8	(35)	12	(52)	16	(70)	20	(87)	30	(131)	39	(174)	.00011	(3)
5/8"	.307	(1.98)	12	(53)	18	(80)	25	(111)	31	(138)	46	(205)	61	(271)	.00018	(5)
1"	.785	(5.06)	31	(138)	47	(209)	63	(280)	70	(351)	118	(525)	157	(698)	.00045	(13)
1-3/8"	1.485	(9.58)	59	(262)	89	(396)	119	(529)	149	(663)	222	(997)	297	(1321)	.00086	(24)
1-3/4"	2.404	(15.51)	95	(423)	144	(641)	192	(854)	240	(1068)	360	(1601)	480	(2135)	.00139	(39)

NORGREN ENGINEERING ADVANTAGE

Series N Actuators

1-1/8" to 4" bore sizes

NFPA Interchangeable

Cylinders rated to 250 PSI air, 400 PSI hydraulic (non-shock).

Designed for non-lube service.

Switches available on all bore sizes.

Technical data

Medium:
Filtered compressed air to 250 psi
(for hydraulic service consult factory.)

Operating Temperatures:
-20°F to 200°F
(-29°C to 93°C)

Operating Pressure:
250 psig (17.2 bar)
1-1/8" Bore pressure rating: 150 psi

Bore Sizes:
1-1/8", 1-1/2", 2", 2-1/2", 3-1/4", 4"

Materials:
Head and end caps - anodized 6061-T6 aluminum
Tube: 6063-T832 aluminum, clear anodized O.D., hard coat anodized I.D.
Piston Rod: C1141 hard chrome plated steel
Piston: 2011-T451 aluminum
Rod Bearings: G2 Durabar cast iron, teflon coated
Seals: carboxylated nitrile
Tie Rods: 12L14 steel

Options selector

N C 04 J - E 02 - A M B 0 0

Series	
Series N	N
Series Q Electroless Nickel	Q

Bore	Single rod end	Double rod end*
1-1/8"	B	P
1-1/2"	C	Q
2"	D	R
2-1/2"	E	S
3-1/4"	F	T
4"	G	U

* Double Rod End has two Piston Rods on one end and one Piston Rod on opposite end.

Strokes in inches	Substitute
0" Stroke	00
1" Stroke	01
2" Stroke	02
3" Stroke	03
4" Stroke	04
5" Stroke	05
6" Stroke	06
. . .	. . .
30" Stroke	30
Special	xx

Fractional Increments of Stroke			
0"	A	1/2"	J
1/16"	B	9/16"	K
1/8"	C	5/8"	M
3/16"	D	11/16"	N
1/4"	E	3/4"	P
5/16"	F	13/16"	R
3/8"	G	7/8"	S
7/16"	H	15/16"	T
X	Special		

Rod Axis	
Horizontal Rod Axis	E
Vertical Rod Axis	N
No Tooling Plate - Horizontal Rod	A
No Tooling Plate - Vertical Rod	B
Blank Rod End - Horizontal Rod*	C
Blank Rod End - Vertical Rod*	D
Special	X

* Does not include tooling plate

Note: Double rod is not available with oversize rear rod on 1-1/2" bore.

Options	
No Options	0
Metal Rod Scraper	M
Air/Oil Piston	P
Double Rod W/OS Cap Rod	R
Stainless Piston Rods	S
Viton Seals	V
Special	X

Magnetic Option	
No Magnet	0
Magnetic Piston	M

Design Level B

Cushions†				
Needle Position	1	2**	3	4
No Cushions		A		
Head Only	B	C	D	E
Cap Only	G	H	J	K
Head and Cap	N	M	P	R
Special		X		

†Cushions not available on 1-1/8" Bore.
**Standard position

Ports				
Position	1**	2	3	4
Standard	A	B	C	D
Special		X		

**Standard position

Mounting Options	
01 No Mounts (MX0)	07 Det. Clevis (MP2)
02 Bottom Tap (MS4)	18 Det. Eye (MP4)
04 Front Flange (MF1)	20 Base Bar
05 Rear Flange (MF2)	XX Special

Switch, Port, and Cushion Needle Positions
(As viewed from twin rod end)

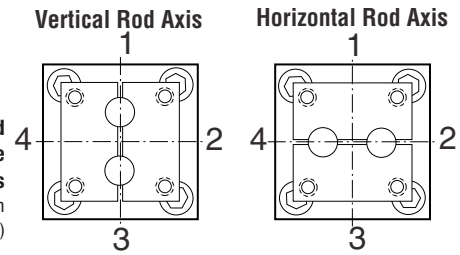

The finest materials for each component!

1 Piston Seals: Lip-type carboxylated nitrile incorporating Teflon® and other non-lube additives as integral parts of the compound. Extremely smooth stroke performance and "no lube added" operation results from reduced friction.

2 Piston: Solid aluminum alloy, light-weight for low inertia, yet strong.

3 Head/Cap: Precision machined from (6061-T6) solid aluminum bar, anodized for corrosion resistance.

4 Rod Wiper: Lip-type urethane aggressively wipes foreign material from piston rod.

5 Rod Seals: Rounded lip-type carboxylated nitrile incorporating Teflon® and other non-lube additives as integral parts of the compound. Extremely smooth stroke performance and "no lube added" operation results from reduced friction. Rod Seal is pressure-energized and wear-compensating.

6 Piston Rods: High-strength, hard-chrome plated, ground and polished steel.

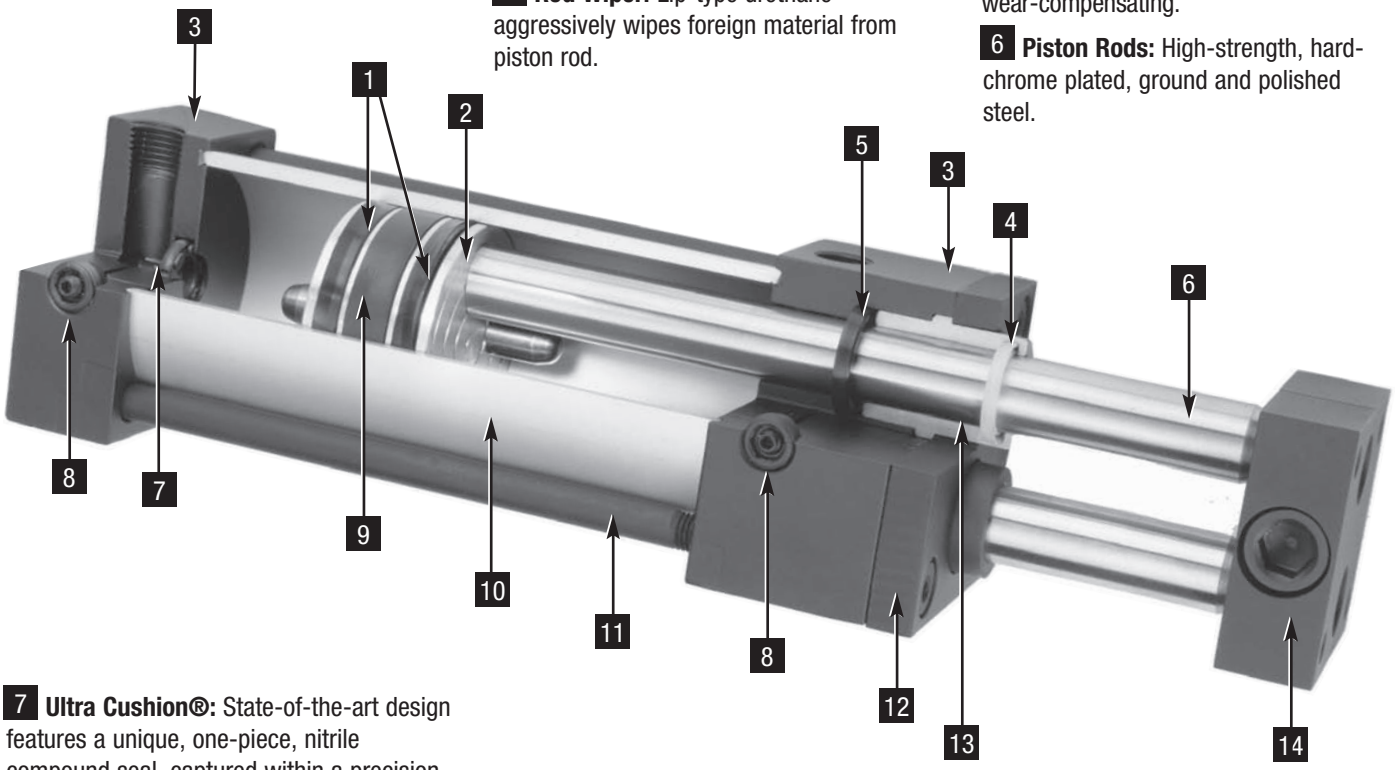

7 Ultra Cushion®: State-of-the-art design features a unique, one-piece, nitrile compound seal, captured within a precision machined groove. Linear and radial "float" of cushion seal eliminates misalignment. Ultra Cushions provide exceptionally fast "out of cushion" stroke reversal. (Head and Cap Cushions are optional.)

8 Adjustable Captive Cushion Needle

9 Wear Strip: Teflon® and graphite composition for minimum friction, maximum wear and side load resistance. (Magnetic band under wear strip optional.)

10 Tube: 6063-T832 aluminum alloy ideally suited for air service. Tube is clear anodized on the O.D. and "hard anodic coated" on the I.D. resulting in a smooth, file-hard (60RC), corrosion-resistant and score-resistant surface finish.

11 Tie Rods: High-strength steel maintains compression on tube end seals.

12 Retainer: High-strength steel is used to retain rod bearings.

13 Rod Bearings: Machined from durable, close-grained cast iron, then completely coated with Teflon® to insure permanent lubrication and corrosion resistance.

14 Tooling Plate: Machined from solid steel and notched for secure attachment. Modular and pilot adaptor plates are available to add to the tooling plate mounting. (Use of modular and pilot adapter plates adds to overall length.)

Series Q

Series Q cylinders are designed for corrosive environments. They are identical to the Series N in design, function, and dimensions, but have electroless nickel plating and stainless steel components to create significant resistance to corrosion.

Features:

Head, cap, tube , bushings, front plate, mounts, tooling plate, tie rod nuts, and screws are plated with electroless nickel to a minimum thickness of .0005".

Piston rod, tie rods, and cushion needles are made from 300 series stainless steel.

NORGREN ENGINEERING ADVANTAGE

Series N Actuators

1-1/8" to 4" bore sizes

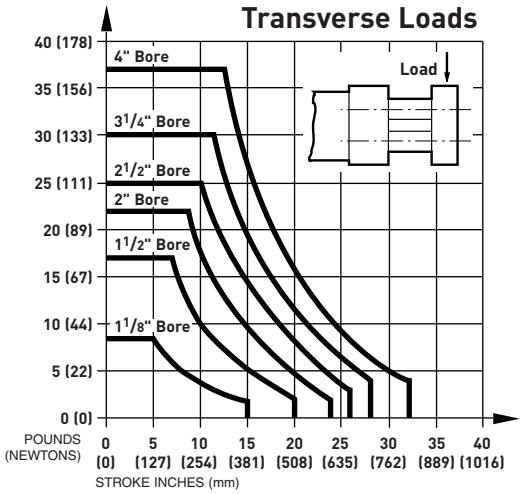

The transverse and torsional load graphs shown are to be utilized as a guideline with respect to the maximum load and stroke of each bore size.

NOTE: For strokes or loads not listed consult factory.

Transverse or torsional loads placed on the cylinder will cause some deflection of the piston rods. Excessive deflection will adversely affect cylinder life and should be considered at the time of initial application design.

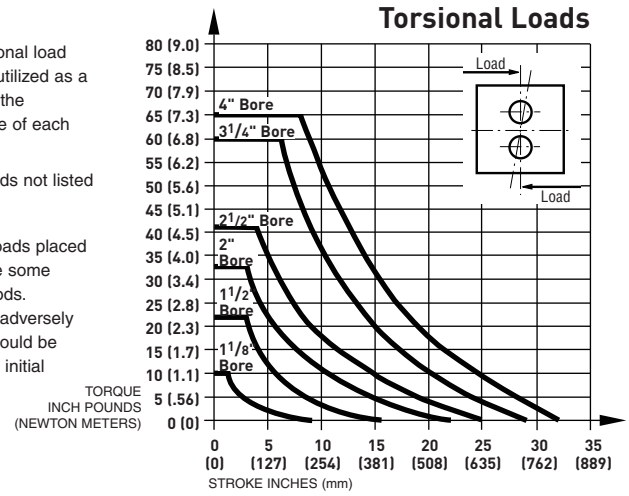

Basic Actuator 01 (MX0)

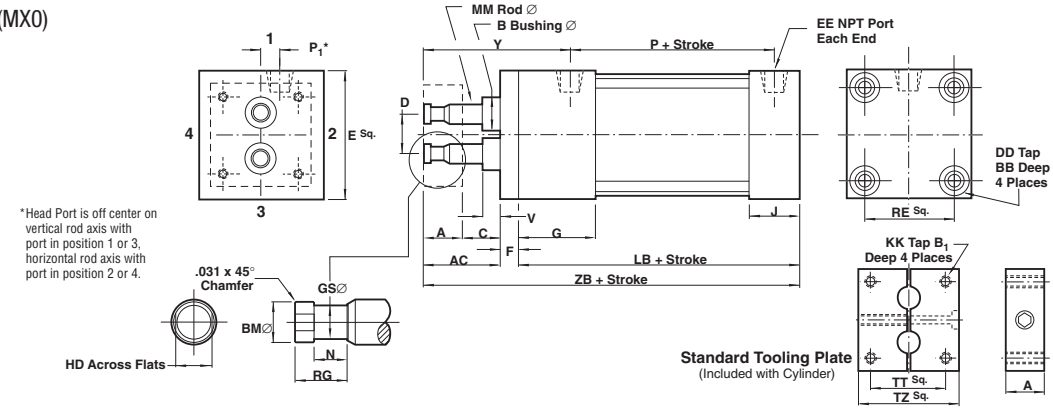

*Head Port is off center on vertical rod axis with port in position 1 or 3, horizontal rod axis with port in position 2 or 4.

Bore	A	AC	B	B1	BB	BM	C	D	DD	E	EE	F	G	GS
1-1/8"	0.625	1.25	N/A	0.5	0.188	0.27	0.625	0.627	10 – 32	1.5	1/8	0.25	.875	0.19
1-1/2"	0.625	1.5	0.59	Thru	0.312	0.33	0.875	0.75	1/4 – 28	2	1/4	0.375	1.5	0.25
2"	0.75	1.5	0.9	Thru	0.312	0.55	0.75	1.052	5/16 – 24	2.5	1/4	0.375	1.5	0.5
2-1/2"	0.75	1.75	0.9	Thru	0.312	0.55	1	1.398	5/16 – 24	3	1/4	0.375	1.5	0.5
3-1/4"	1.25	1.75	1.498	Thru	0.437	0.9	0.5	2	3/8 – 24	3.75	3/8	0.625	1.75	0.75
4"	1.25	1.75	1.498	Thru	0.437	0.9	0.5	2.36	3/8 – 24	4.5	3/8	0.625	1.75	0.75

Bore	HD	J	KK	LB	MM	N	P	P1	RE	RG	TT	TZ	V	Y	ZB
1-1/8"	0.25	0.625	6 – 32	2.25	0.312	0.4	1.469	0.241	1.125	0.58	0.75	1.25	N/A	2.031	3.75
1-1/2"	0.312	1	10 – 32	3.625	0.375	0.4	2.125	0.303	1.428	0.58	1.125	1.5	0.25	2.875	5.5
2"	0.5	1	1/4 – 28	3.625	0.625	0.526	2.125	0.48	1.84	0.705	1.43	2	0.25	2.875	5.5
2-1/2"	0.5	1	5/16 – 24	3.75	0.625	0.526	2.25	0.635	2.192	0.705	1.84	2.5	0.25	3.125	5.875
3-1/4"	0.812	1.25	3/8 – 24	4.25	1	0.784	2.625	0.845	2.758	1.205	1.79	3.25	0.25	3.437	6.625
4"	0.812	1.25	3/8 – 24	4.25	1	0.784	2.625	0.875	3.323	1.205	3.44	4	0.25	3.437	6.625

Cylinder with 20 (not NFPA) Base Bar

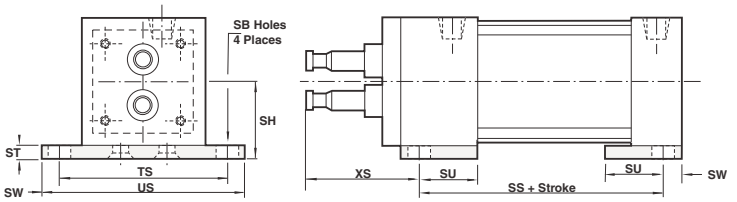

Bore	F	G	LB	SB	SS	ST	SU	SW	TS	US	XS
1-1/8"	0.25	1	2.25	0.203	1.75	0.25	0.75	0.25	1.875	2.375	1.75
1-1/2"	0.375	1.5	3.625	0.437	2.875	0.25	1.125	0.375	2.75	3.5	2.25
2"	0.375	1.5	3.625	0.437	2.875	0.25	1.125	0.375	3.25	4.0	2.25
2-1/2"	0.375	1.5	3.75	0.437	3	0.375	1.125	0.375	3.75	4.5	2.5
3-1/4"	0.625	1.75	4.25	0.563	3.25	0.5	1.25	0.5	4.75	5.75	2.875
4"	0.625	1.75	4.25	0.563	3.25	0.5	1.25	0.5	5.5	6.5	2.875

Cylinder with 02 Bottom Tap

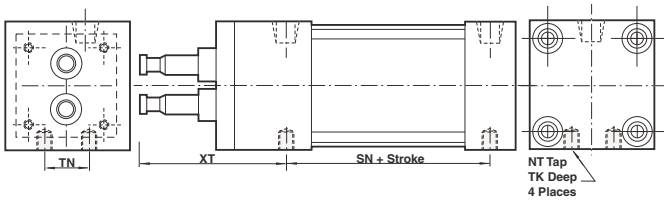

Bore	NT	SN	TK	TN	XT
1-1/8"	10 – 32	1.5	0.25	0.5	2
1-1/2"	1/4 – 20	2.25	0.375	0.625	2.812
2"	5/16 – 18	2.25	0.375	0.875	2.812
2-1/2"	3/8 – 16	2.375	0.625	1.25	3.063
3-1/4"	1/2 – 13	2.625	0.625	1.5	3.437
4"	1/2 – 13	2.625	0.75	2.063	3.437

Series N Actuators

1-1/8" to 4" bore sizes

Cylinder with 04 (MF1) Front Flange

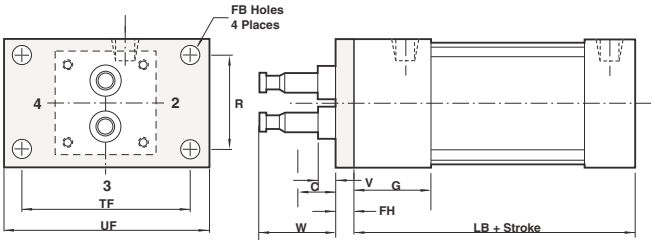

Bore	C	FB	FH	R	TF	UF	W
1-1/8"	0.625	0.219	0.25	1	2	2.5	1.25
1-1/2"	0.875	0.312	0.375	1.43	2.75	3.75	1.5
2"	0.75	0.375	0.375	1.84	3.375	4.125	1.5
2-1/2"	1	0.375	0.375	2.19	3.875	4.625	1.75
3-1/4"	0.5	0.437	0.625	2.76	4.688	5.5	1.75
4"	0.5	0.437	0.625	3.32	5.437	6.25	1.75

Cylinder with 05 (MF2) Rear Flange

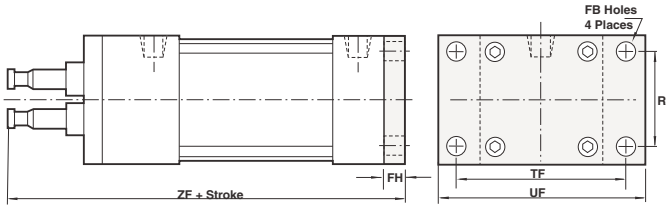

Bore	FB	FH	TF	UF	ZF
1-1/8"	0.219	0.25	2	2.5	4
1-1/2"	0.312	0.375	2.75	3.75	5.875
2"	0.375	0.375	3.375	4.125	5.875
2-1/2"	0.375	0.375	3.875	4.625	6.25
3-1/4"	0.437	0.625	4.688	5.5	7.25
4"	0.437	0.625	5.437	6.25	7.25

Cylinder with 07 (MP2) Detachable Clevis

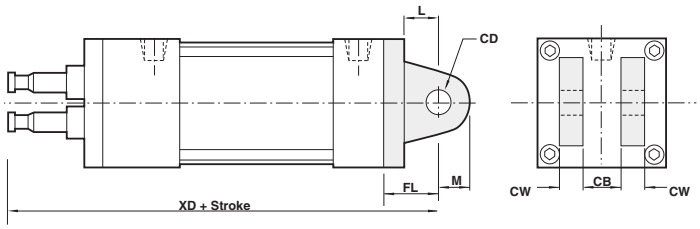

Bore	CB	CD	CW	FL	L	M	XD
1-1/8"	0.375	0.375	0.25	1.125	0.625	0.375	4.875
1-1/2"	0.75	0.5	0.5	1.125	0.75	0.625	6.625
2"	0.75	0.5	0.5	1.125	0.75	0.625	6.625
2-1/2"	0.75	0.5	0.5	1.125	0.75	0.625	7
3-1/4"	1.25	0.75	0.625	1.875	1.25	0.875	8.5
4"	1.25	0.75	0.625	1.875	1.25	0.875	8.5

Cylinder with 18 (MP4) Detachable Clevis

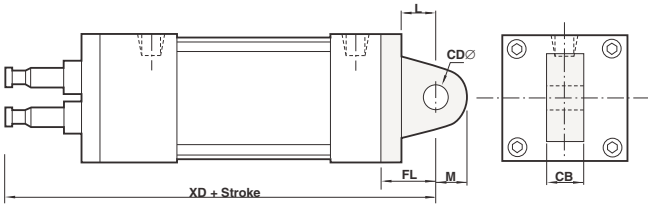

Bore	CB	CD	FL	L	M	XD
1-1/8"	0.375	0.375	1.125	0.625	0.375	4.875
1-1/2"	0.75	0.5	1.125	0.75	0.625	6.625
2"	0.75	0.5	1.125	0.75	0.625	6.625
2-1/2"	0.75	0.5	1.125	0.75	0.625	7
3-1/4"	1.25	0.75	1.875	1.25	0.875	8.375
4"	1.25	0.75	1.875	1.25	0.875	8.375

Double Rod End Cylinder

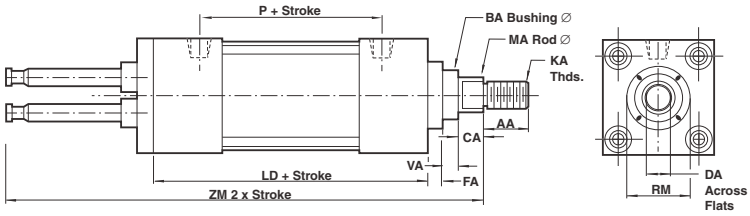

Bore		AA	BA	CA	DA	FA	KA	LD	MA	P	RM	VA	ZM
1-1/8"	Standard	0.625	N/A	0.25	0.312	0.125	3/8 – 24	†2.875	0.375	†1.844	0.75	N/A	†4.625
	Oversize	0.75	N/A	0.25	0.437		1/2 – 20		0.5		1.00	N/A	
1-1/2"	Standard	0.75	1.125	0.375	0.5	0.375	1/2 – 20	4.125	0.625	2.125	2.00	0.25	7.00
	Oversize	1.125	1.4	0.5	0.812		3/4 – 16		1.00		2.00	0.5	
2"	Standard	0.75	1.125	0.375	0.5	0.375	1/2 – 20	4.125	0.625	2.125	2.00	0.25	7.00
	Oversize	1.125	1.5	0.5	0.812		3/4 – 16		1.00		2.50	0.5	
2-1/2"	Standard	.75	1.125	0.375	0.5	0.375	1/2 – 20	4.25	0.625	2.25	2.00	0.25	7.35
	Oversize	1.125	1.5	0.5	0.812		3/4 – 16		1.00		3.00	0.5	
3-1/4"	Standard	1.125	1.5	0.5	0.812	0.625	3/4 – 16	4.75	1.00	2.65	2.625	0.25	8.50
	Oversize	1.625	2	0.625	1.125		1 – 14		1.375		3.375	0.375	
4"	Standard	1.125	1.5	0.5	0.812	0.625	3/4 – 16	4.75	1.00	2.625	2.625	0.25	8.5
	Oversize	1.625	2	0.625	1.125		1 – 14		1.375		3.375	0.375	

†Note: 1-1/8" bore overall body is 3/8" longer than our standard Series "C" Double Rod End Cylinder.

NORGREN ENGINEERING ADVANTAGE

Series N Actuators

1-1/8" to 4" bore sizes

Double Rod End w/20 (not NFPA) base bar

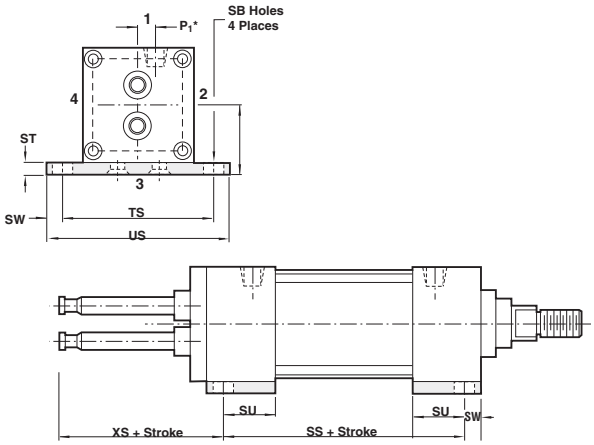

Bore	F	SB	SS	ST	SU	SW	TS	US	XS
1-1/8"	0.25	0.203	2.25	0.25	0.75	0.25	1.875	2.375	1.75
1-1/2"	0.375	0.437	3.375	0.25	1.125	0.375	2.75	3.5	2.25
2"	0.375	0.437	3.375	0.25	1.125	0.375	3.25	4	2.25
2-1/2"	0.375	0.437	3.5	0.375	1.125	0.375	3.75	4.5	2.25
3-1/4"	0.625	0.563	3.75	0.5	1.25	0.5	4.75	5.75	2.875
4"	0.625	0.563	3.75	0.5	1.25	0.5	5.5	6.5	2.875

Double Rod End w/04 (MF1) Front Flange

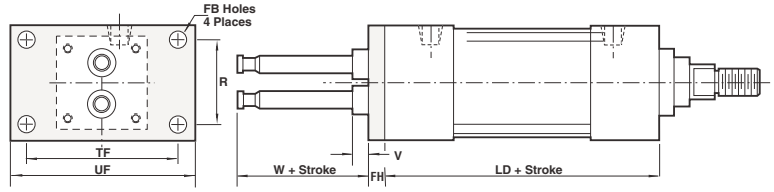

Double Rod End w/05 (MF2) Rear Flange

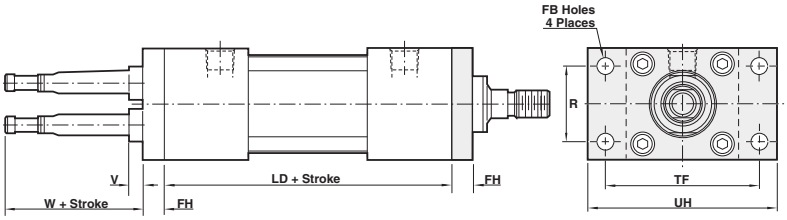

Bore	FB	FH	LD	R	TF	UF	V	W
1-1/8"	0.219	0.250	2.875	1	2	2.5	N/A	1.25
1-1/2"	0.312	0.375	4.125	1.43	2.75	3.75	0.25	1.5
2"	0.375	0.375	4.125	1.84	3.375	4.125	0.25	1.5
2-1/2"	0.375	0.375	4.25	2.19	3.875	4.625	0.25	1.75
3-1/4"	0.437	0.625	4.75	2.76	4.688	5.5	0.25	1.75
4"	0.437	0.625	4.75	3.32	5.437	6.25	0.25	1.75

Double Rod End w/02 (MS4) bottom tap

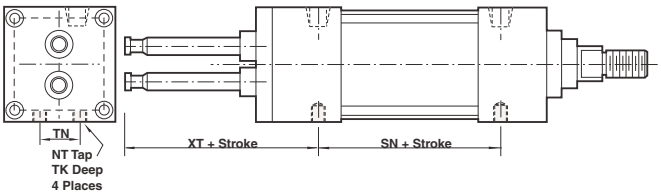

Bore	NT	SN	TK	TN	XT
1-1/8"	10 – 32	1.875	0.25	0.5	2
1-1/2"	1/4 – 20	2.25	0.375	0.625	2.812
2"	5/16 – 18	2.25	0.375	0.875	2.812
2-1/2"	3/8 – 16	2.375	0.625	1.25	3.063
3-1/4"	1/2 – 13	2.625	0.625	1.5	3.437
4"	1/2 – 13	2.625	0.75	2.063	3.437

NFPA Eye Bracket Dimensions

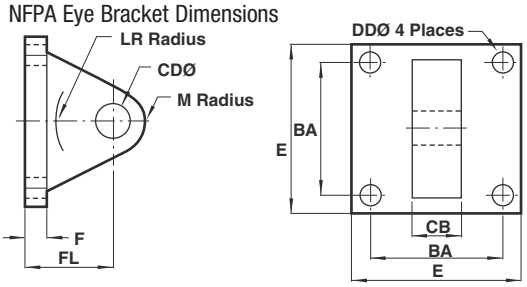

Bore	BA	CB	CD	DD	E	F	FL	LR	M
C-89-03A	1.625	.750	.500	.406	2.500	.375	1.125	.750	.50
C-89-065A	2.562	1.250	.750	.531	3.500	.625	1.875	1.250	.750
C-89-12A	3.250	1.500	1.000	.656	4.500	.750	2.250	1.500	1.000

NFPA Clevis Bracket Dimensions

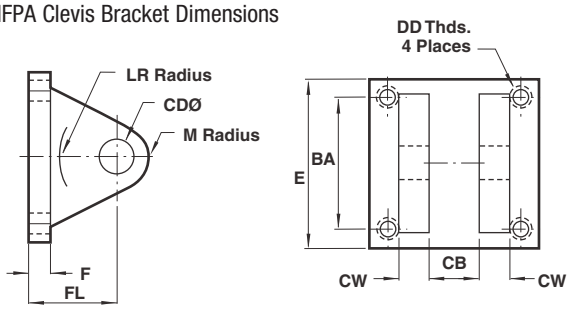

	BA	CB	CD	CW	DD	E	F	FL	LR	M
C-91-03A	1.625	.750	.50	.50	3/8-24	2.50	.375	1.125	.750	.500
C-91-065A	2.562	1.250	.750	.625	1/2-20	3.500	.625	1.875	1.250	.812
C-91-12A	3.250	1.500	1.000	.750	5/8-18	4.500	.750	2.250	1.500	1.000

1-1/8" Bore Eye & Clevis Bracket Dimensions

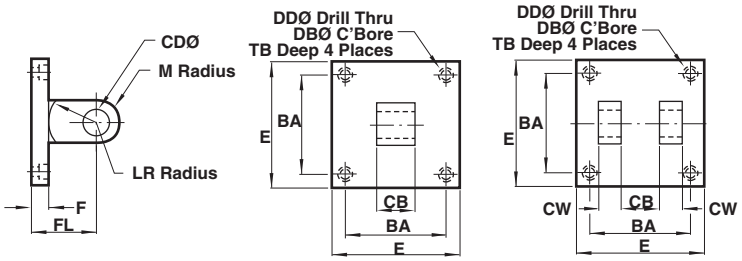

	BA	CB	CD	CW	DB	DD	E	F	FL	LA	M	TB
W-89-225K Eye	1.125	.375	.375	–	.328	.203	1.500	.500	1.125	.625	.375	.312
W-91-225K Clevis	1.150	.375	.375	.250	.328	.203	1.500	.500	1.125	.625	.375	.312

Series N Actuators

1-1/8" to 4" bore sizes

Rod Clevis Dimensions

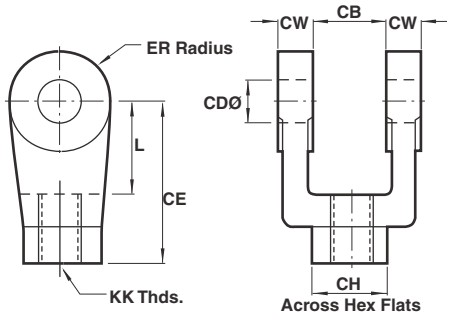

	CB	CD	CE	CH	CW	ER	KK	L
C-92-03	.750	.500	1.500	1.000	.500	.500	1/2-20	.750
C-92-065	1.250	.750	2.375	1.250	.625	.750	3/4-16	1.250
C-92-12	1.500	1.000	3.125	1.500	.750	1.000	1-14	1.500

Pilot Adaptor Plate Dimensions

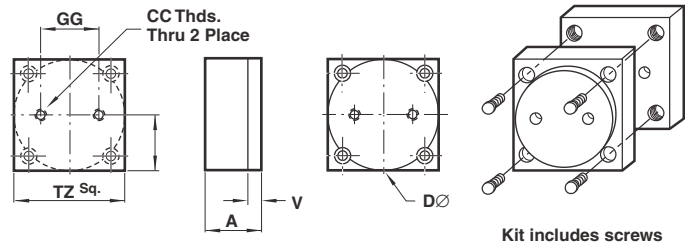

Bore	A	CC	D	GG	TZ	V	Y
NB-171-225K (1-1/8)	.625	1/4-20	1.260	.750	1.25	.160	.625
NB-171-03K (1-1/2")	.625	5/16-18	1.575	.860	1.500	.160	.750
NB-171-04K(2")	.625	5/16-18	1.969	1.180	2.000	.200	1.000
NB-171-05K (2-1/2")	.625	3/8-16	2.480	1.500	2.500	.200	1.250
NB-171-065K (3/4")	.875	1/2-13	3.150	1.970	3.250	.200	1.625
NB-171-08K (4")	.875	1/2-13	3.937	2.760	4.000	.200	2.000

Rod Eye Dimensions

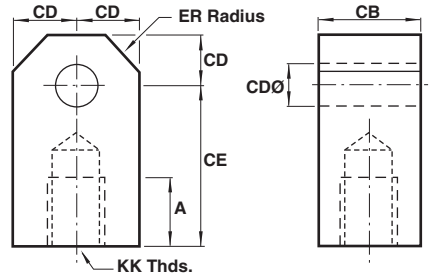

	CB	CD	CE	ER	KK
C-97-03	.750	.500	1.500	.562	1/2-20
C-97-065	1.250	.750	2.062	.937	3/4-16
C-97-12	1.500	1.000	2.812	1.125	1-14

Modular Adaptor Plate Dimensions

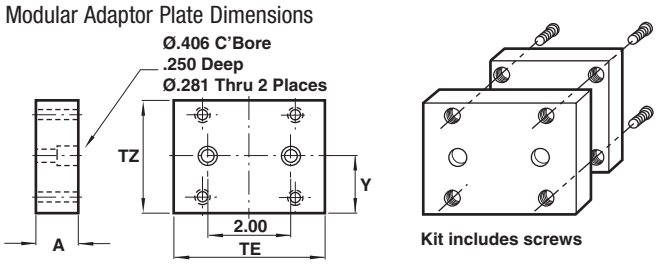

Bore	A	TE	TZ	Y
NB-172-225K (1-1/8")	0.625	3.00	1.25	0.625
NB-172-03K (1-1/2")	0.625	3.00	1.50	0.75
NB-172-04K (2")	0.625	3.00	2.00	1.00
NB-172-05K (2-1/2")	0.625	3.00	2.50	1.25

NFPA Pin Dimensions

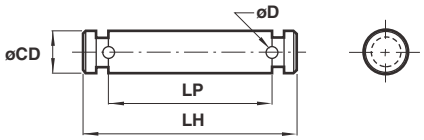

	CD	LH	LP
C-96-03A	.500	2.219	1.875
C-96-065A	.750	3.125	2.750
C-96-12A	1.000	3.750	3.250

Standard Pin Dimensions

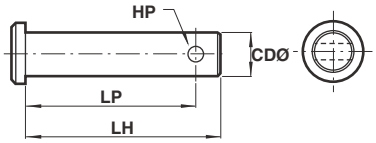

	CD	HP	LH	LP
C-96-225	.375	.156	1.250	1.032
C-96-03	.500	.156	2.250	2.093
C-96-065	.750	.156	3.000	2.843
C-96-12	1.000	.203	3.500	3.297

NORGREN ENGINEERING ADVANTAGE

Series ET, T & VT Tiny Tim

3/4" and 1-1/8" bore

Single and double rod end styles

Viton seals optional for higher temperatures

Technical data

Medium:
Compressed air, filtered, lubricated or non-lubricated

Operation:
Single or double acting

Operating Pressure:
150 PSI (10 bar)

Operating Temperature:
-20° to 200°F (-29° to 107°C)

Cylinder Diameters:
3/4", 1-1/8"

Differences between Series T and Series VT air actuators

Series T contains a Quad Ring Buna-N piston seal. The VT Series utilizes a dual Block-Vee nitrile piston seal design.

The Block-Vee seals increase the envelope dimensions of the Series VT cylinders by 3/8". All other features of the Series T and VT are the same.

Series VT cylinders have a slightly lower breakaway pressure (psig) than the Series T Tiny Tim air cylinders.

Options selector for T, VT, and ET

VT SR 3/8 RC EN 1-1/8 5

Stroke (inches)

Bore
(Specify 3/4" or 1-1/8")

Single Rod End Models	Substitute
Quad ring piston seal, block – vee rod seal	T
Block-vee piston and rod seals	VT
Ecology piston seals and block-vee rod seal	ET
Double Rod End Models	
Quad ring piston, block – v-rod seal	DT
Block-vee piston and rod seals	VDT
Ecology piston seals and block-vee rod seal	EDT

Mounting Styles	Substitute
Flush mount	F
CLevis mount	C
Nose mount	SR
Rear flange mount	FC
Front flange mount	FR
Head trunnion mount	HT
Back trunnion mount	BT

Rod Diameter	Specify
	5/16" or 3/8"

Single Acting Cylinders (3/4", 1-1/8" ø)	Substitute
Spring on rod end (spring retracts rod)	SR
Spring on cap end (spring extends rod)	SC

Notes: Cylinder requires a stop tube equivalent to the stroke length.
Cushions not avilable on spring end of cylinder.
Standard spring forces for SR and SC = 3.5 lbs relaxed, 11.5 lbs compressed

Options	Substitute
T and VT stroke adjustment (Specify length of adjustment)	A
ET stroke adjustment (length of adjustment) Note: adds 1/2" to overall length.	AA
Electroless nickel plating (includes option S)	EN
*†Pneulectric valve (postition 1, 2, 3, 4)	EV
* Non-standard port location (Specify location)	L
Non thread rod	PR
Magnetic Piston	PS
Rod extension over standard. (Specify length)	RX
Stainless steel tie rods and nuts	S
Chrome-plated stainless steel piston rod	SS
*†Stroke signal valve (position 1, 2, 3, 4)	SV
Rod thread extension over standard (specify length)	TX
Viton® seals -20° to 400°F temperature range.	V

* Designate head position first, and cap position last
† Not available on 1-1/8" bore Series T or any 3/4" bore cylinder.

Cushions	Substitute
Rod end cushion	R
Cap end cushion	C
Both ends cushioned	RC

Notes: Available on 1-1/8" bore cylinders only.
1/4" effective cushion length.
Add 9/16" to overall length of cylinder for each cushion. Cushion not available on spring end of a single acting cylinder.

Series ET

Series ET actuators achieve their cushion effect through the normal compression of the Buna-N "Ecology" impact dampening seals at the completion of the cylinder stroke. This compressive action absorbs the cylinder's kinetic energy and reduces the shock created by the piston striking the end caps.

The measurable cushion effect of the "Ecology" impact dampening seals provides a predictable pounds stoppable/piston speed ratio, allowing you to determine the exact weight that can be stopped at a given piston speed.

Series ET actuators also help meet OSHA's noise and clean air standards (see website). They are guaranteed to operate without lubrication for one year regardless of cycles. Non-lubricated operation is achieved by the combined efforts of an oil-impregnated sintered iron piston rod busing that lubricates the rod during normal operation, and through the use of a reinforced Teflon wear ring on the center perimeter of the piston. This ring reduces friction between the piston and the cylinder tube.

Energy Absorption Capacity of Impact Dampening Seals

Size	In./Lbs of Kinetic Energy Absorbable	Pounds* Stoppable at Following Speeds 6 in/sec	12 in/sec	24 in/sec	36 in/sec	48 in/sec	60 in/sec
3/4"	1.5	32.4	8.0	2.0	.8	.41	.23
1", 1-1/8"	3	79.2	16	4	1.8	1	.59

*Pounds must include piston and rod assembly weight

Series T, VT, ET Tiny Tim Non-NFPA Interchangeable

Series T

Series T uses Quad Ring Buna-Ring piston seal.

1 Heads and Caps: Corrosion resistant alloy or black oxided steel.
2 Rod Bushing: Oil-filled, sintered iron bushing.
3 Rod Seal: Replaceable block-vee Buna-N rod seal (Viton® optional).
4 Piston Rod: Hard chrome plated high tensile steel piston rod.
5 Seals: O-ring type seals.
6 Tie Rods: High yield strength tie rods.
7 Piston Seal: Replaceable quad ring Buna-N (Viton® optional).
8 Piston: Machined alloy.
9 Tubing: Hard anodized I.D. aluminum tubing.

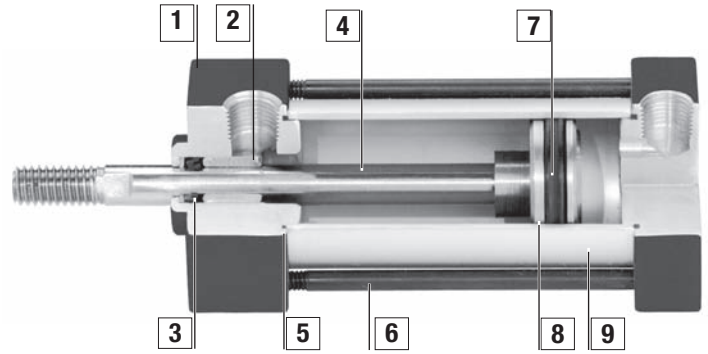

Series VT

10 Series VT uses Block-Vee Buna-N piston seal. This increases envelope dimension by 3/8" but provides lower breakaway pressure.

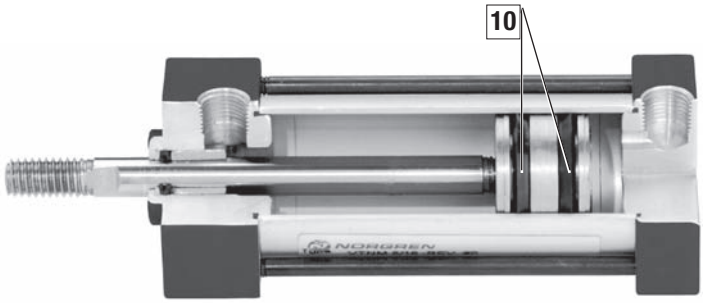

Series ET

Series ET actuators achieve their cushion effect through the normal compression of the Buna-N "shock-absorber"seals at the completion of the cylinder stroke. This compressive action absorbs the cylinder's kinetic energy and reduces the shock created by the piston striking the end caps.

The measurable cushion effect of the "shock-absorber" seals provides a predictable pounds stoppable/piston speed ratio, allowing you to determine the exact weight that can be stopped at a given piston speed.

Series ET actuators also help meet OSHA's noise and clean air standards. They are guaranteed to operate without lubrication for one year regardless of cycles. Non-lubricated operation is achieved by the combined efforts of an oil-impregnated sintered iron piston rod busing that lubricates the rod during normal operation, and through the use of a reinforced Teflon wear ring on the center perimeter of the piston. This ring reduces friction between the piston and the cylinder tube.

11 Wear Ring: Teflon® reinforced wear ring.
12 Impact Dampening Seals: Specifically designed piston incorporates energy absorbing seals to dissipate the forces generated during impact without increasing envelope dimensions. Not available for cylinders with oversize rods. Not recommended for applications that require 100% repeatable stroke increments, or for applications that exceed the pounds stoppable.

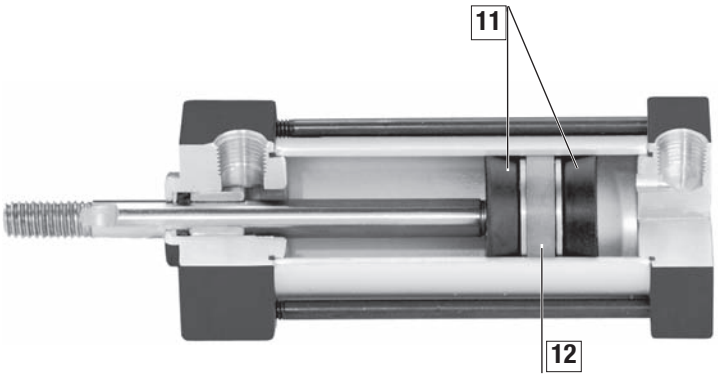

NORGREN ENGINEERING ADVANTAGE

Series T, ET, VT (3/4" Bore, 5/16" Rod)

Dimensions in inches (mm)

Standard Cylinder (TNM, VTNM, ETNM)

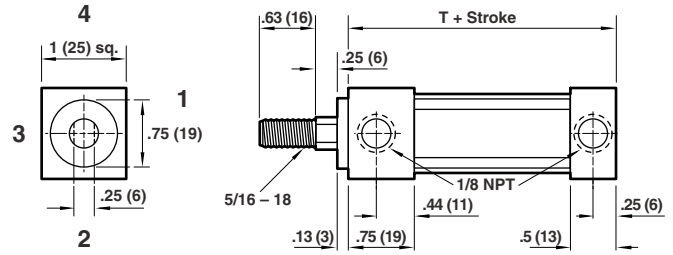

Flush Mount – TF, VTF, ETF

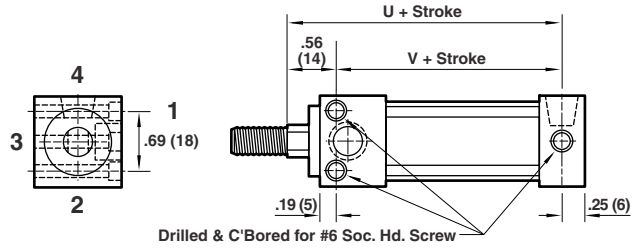

Front Flange Mount – TFR, VTFR, ETFR

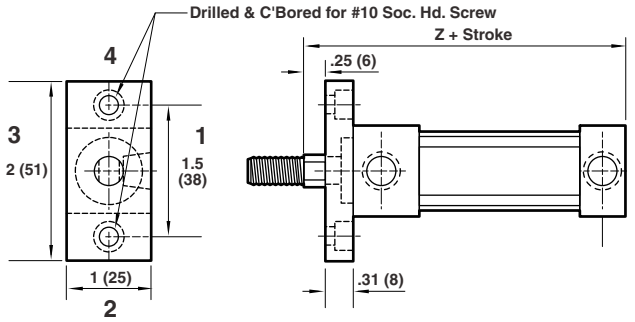

Rear Flange Mount – TFC, VTFC, ETFC

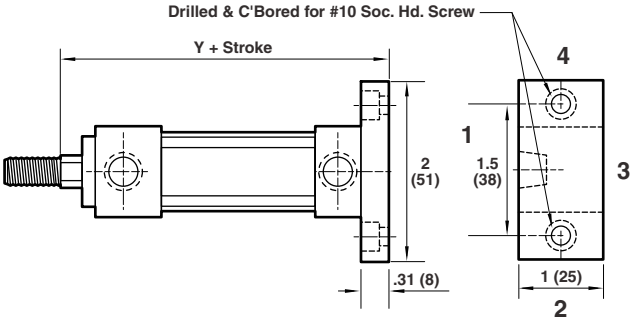

Nose Mount – TSR, VTSR, ETSR

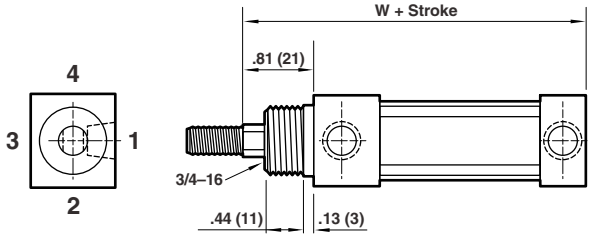

Clevis Mount – TC, VTC, ETC

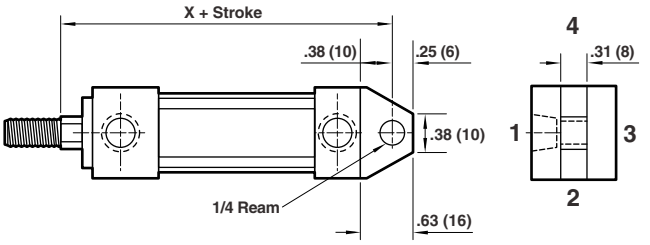

Head Trunnion Mount* – THT, VTHT, ETHT

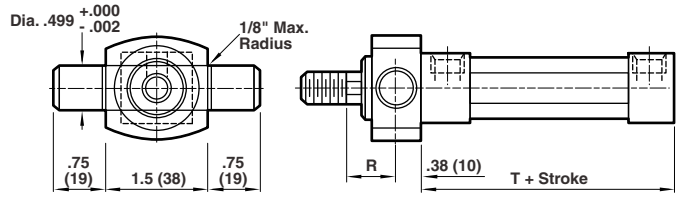

*Configured as special at factory

Back Trunnion Mount* – TBT, VTBT, ETBT

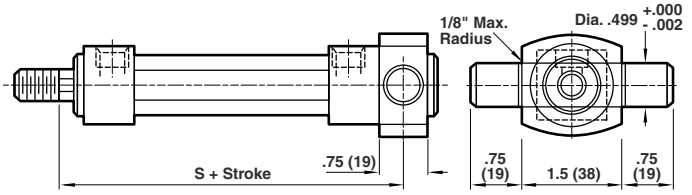

	Series T Quad ring seals	Series VT Block vee seals Series ET Ecology seals
R	.44 (11)	.44 (11)
S	2.81 (71)	3.19 (81)
T	1.81 (46)	2.19 (56)
U	1.94 (49)	2.31 (59)
V	1.38 (35)	1.75 (45)
W	2.63 (67)	3 (76)
X	2.56 (65)	2.94 (75)
Y	2.5 (64)	2.88 (73)
Z	2.38 (60)	2.75 (70)

NOTE: For spring return cylinders add an additional stroke length to dimensions.

Series T, ET, VT (1-1/8" Bore, 5/16" and 3/8" Rods)

Dimensions in inches (mm)

Standard Cylinder (TNM, VTNM, ETNM)

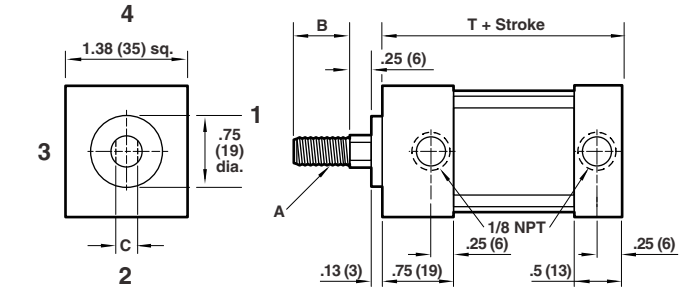

Flush Mount – TF, VTF, ETF

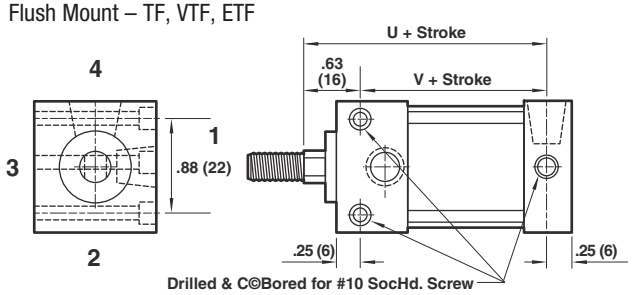

Front Flange Mount – TFR, VTFR, ETFR

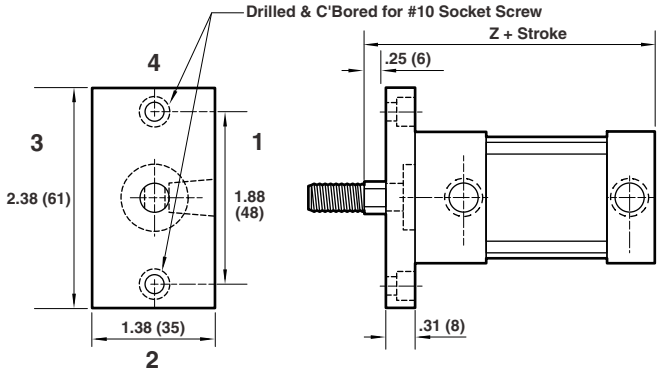

Rear Flange Mount – TFC, VTFC, ETFC

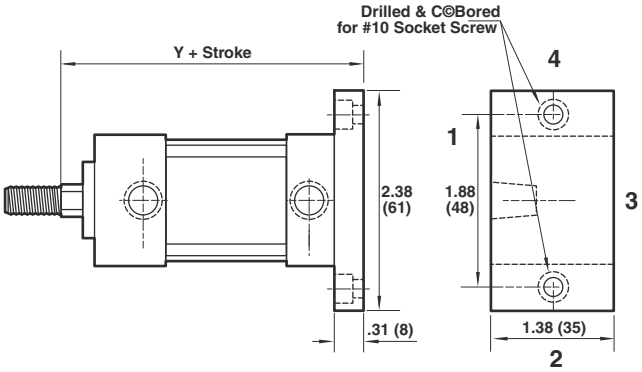

Nose Mount – TSR, VTSR, ETSR

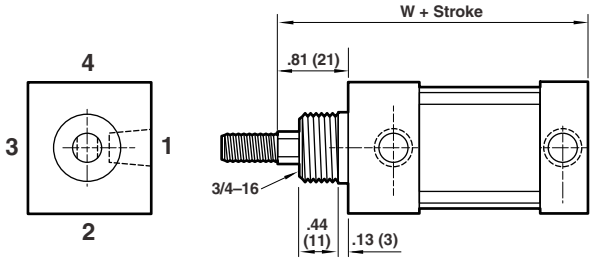

Clevis Mount – TC, VTC, ETC

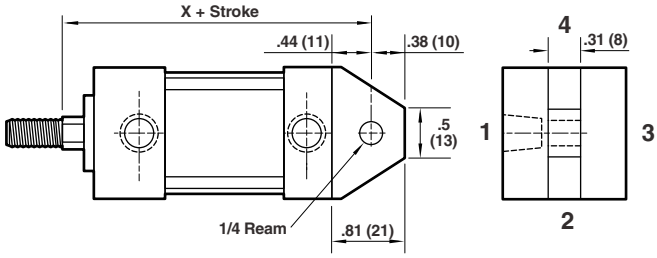

Back Trunnion Mount *– TBT, VTBT, ETBT

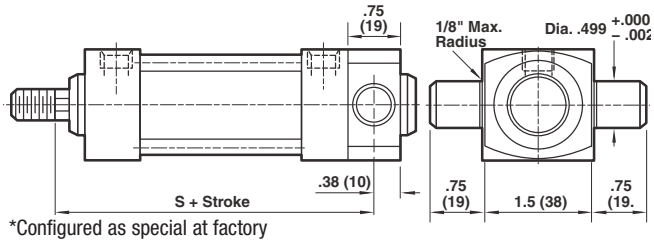

*Configured as special at factory

	Piston Rod 5/16 Diameter	3/8* Diameter
A	5/16-18	3/8-24
B	.63 (16)	.75 (19)
C	.25 (6)	.31 (8)

* 3/8" dia. piston rod will be furnished as an option only if specified.

	Series T Quad ring seals	Series VT Block vee seals Series ET Ecology seals
R	.44 (11)	.44 (11)
S	2.81 (71)	3.19 (81)
T	1.81 (46)	2.19 (56)
U	1.94 (49)	2.31 (59)
V	1.31 (33)	1.69(43)
W	2.63 (67)	3 (76)
X	2.63 (67)	3 (76)
Y	2.5 (64)	2.88 (73)
Z	2.38 (60)	2.75 (70)

NOTE: Series T, ET & VT 1-1/8" Bore Cylinders are available with adjustable cushions. Increase dimensions T through Z by 9/16" for one cushion and by 1-1/8" for both ends cushioned. (See "Ordering Procedure" for details.) For spring return cylinders add an additional stroke length to above dimensions.

NORGREN ENGINEERING ADVANTAGE

Series DT, EDT, VDT (Double Rod End)

Dimensions in inches (mm)

3/4 Bore

Standard Cylinder (DTNM, VDTNM, EDTNM)

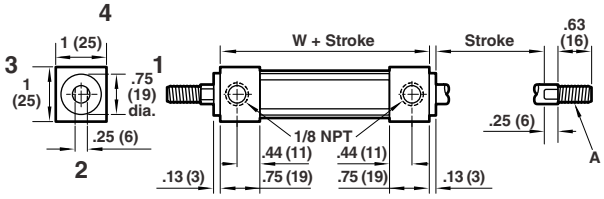

Flush Mount – DTF, VDTF, EDTF

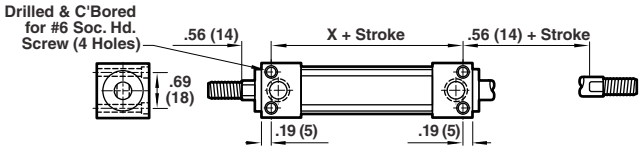

Front Flange – DTFR, VDTFR, EDTFR

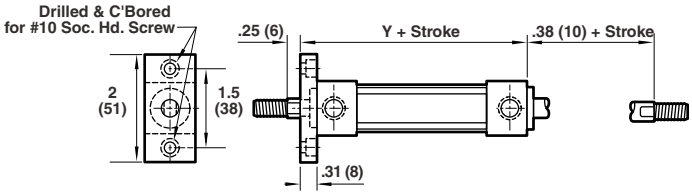

Nose Mount – DTSR, VDTSR, EDTSR

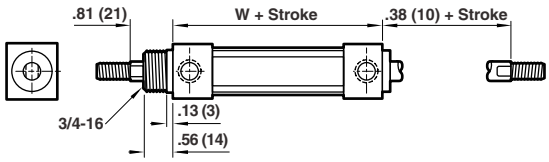

1-1/8 Bore

Standard Cylinder (DTNM, VDTNM, EDTNM)

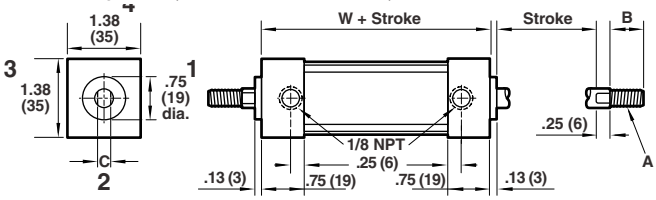

Flush Mount – DTF, VDTF, EDTF

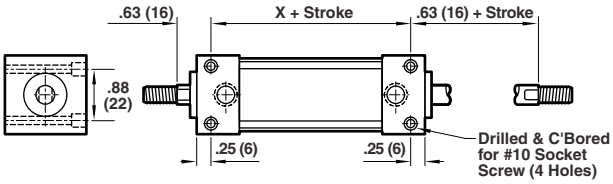

Front Flange – DTFR, VDTFR, EDTFR

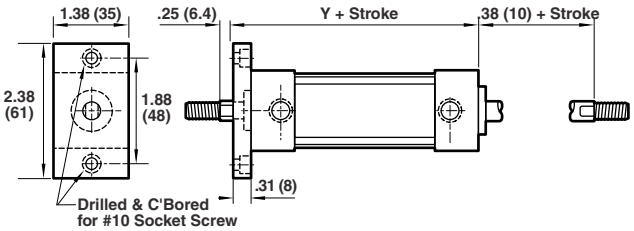

Nose Mount – DTSR, VDTSR, EDTSR

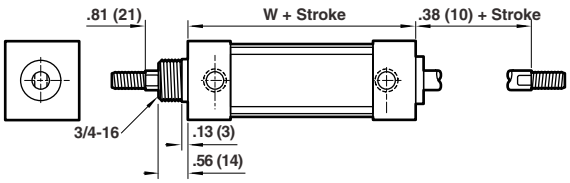

Trunnion Mount *– DTHT, VDTHT, EDTHT

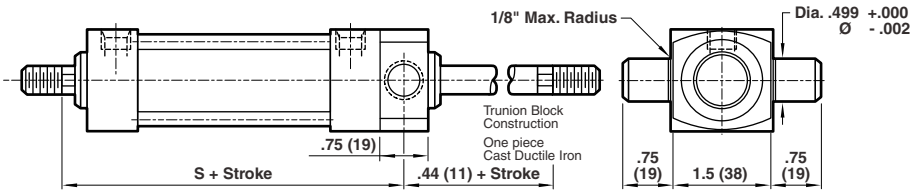

*Configured as special at factory

	Piston Rod 5/16 Diameter	3/8* Diameter
A	5/16-18	3/8-24
B	.63 (16)	.75 (19)
C	.25 (6)	.31 (8)

* 3/8" dia. piston rod will be furnished as an option only if specified.

	3/4" Bore		1-1/8" Bore	
	DT	VDT & EDT	DT	VDT & EDT
S	2.81 (71)	3.19 (81)	2.81 (71)	3.19 (81)
W	2.06 (52)	2.44 (62)	2.06 (52)	2.44 (62)
X	1.69 (43)	2.06 (52)	1.56 (40)	1.94 (49)
Y	2.38 (60)	2.75 (70)	2.38 (60)	2.75 (70)

NOTE: Series DT, VDT & EDT 1-1/8" bore cylinders are available with adjustable cushions. Increase dimensions S through Y by 9/16" for one cushion and by 1-1/8 for both ends cushioned.

Series T, ET, VT Mounting Accessories

Dimensions in inches (mm)

Rod Clevis (includes pin)

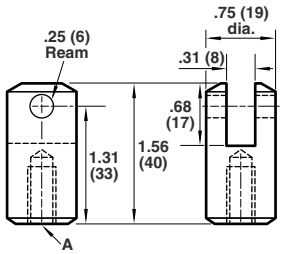

Part Number	Thread
40035	5/16-18
40036	3/8-24

Pin (includes snap rings)

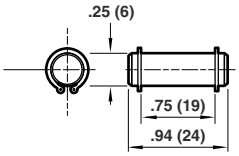

Part Number **49085**

Rod Eye

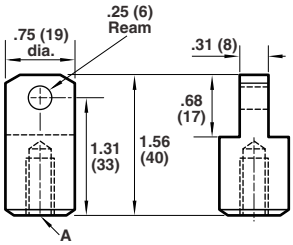

Part Number	Thread
40042	5/16-18
40043	3/8-24

Mounting Screw (for TF, VTF, ETF 3/4")

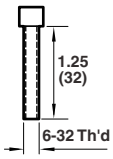

Part Number **51043**

Clevis Bracket (includes pin)

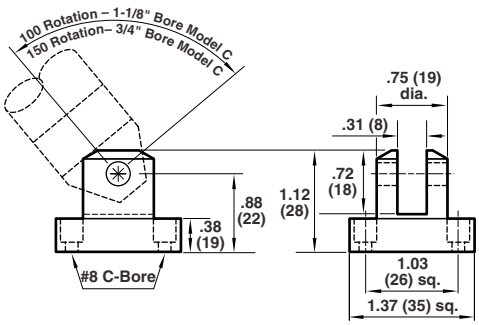

Part Number **40038**

Mounting Nut (for TSR, VTSR, ETSR)

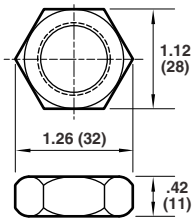

Part Number **52010**

Rod Aligners (includes jam nut)

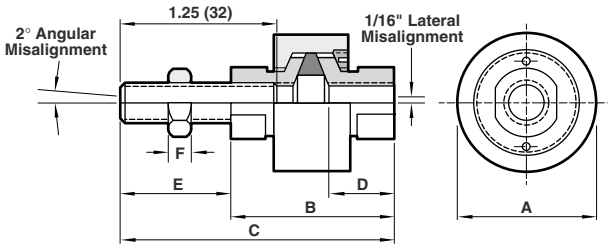

	Rod Aligners			
PN	**RA-25**	**RA-31C**	**RA-32**	**RA-38**
Thread	**1/4-28**	**5/16-18**	**5/16-24**	**3/8-24**
A	1 (25)	1 (25.4)	1 (25)	1 (25)
B	1.38 (35)	1.38 (35)	1.38 (35)	1.38 (35)
C	2.13 (54)	2.13 (54)	2.13 (54)	2.13 (54)
D	.5 (13)	.5 (13)	.5 (13)	.5 (13)
E	.75 (19)	.75 (19)	.75 (19)	.75 (19)
F	.16 (4)	.19 (5)	.19 (5)	.22 (6)

NORGREN
ENGINEERING ADVANTAGE

NFPA Interchangeable TA, TAV, TAE Actuators

3/4", 1", and 1-1/8" bore
Single and double rod end styles
Rated 150 psi air
-20° to 200°F (-29° to 107°C) operating temperatures
Viton seals optional for higher temperatures
Designed to conform with NFPA (T3.6.11) 1972.

Technical data

Medium:
Compressed air, filtered, lubricated or non-lubricated

Operation:
Double acting

Operating Pressure:
150 PSI (10 bar)

Operating Temperature:
-20° to 200°F (-29° to 107°C)

Cylinder Diameters:
Nominal Inch: 3/4", 1-1/8"

Options selector for TA, TAV, and TAE

TA 6 3 A DR EN 1-1/8 5

Stroke (inches)

Bore
3/4"
1"
1-1/8"

Single Rod End Models	Substitute
Quad ring piston seal, block – vee rod seal	TA
Block-vee piston and rod seals	TAV
Ecolgoy piston seals and block-vee rod seal	TAE
Double Rod End Models	
Quad ring piston, block – v-rod seal	DTA
Block-vee piston and rod seals	DTAV
Ecology piston seals and block-vee rod seal	DTAE

Mounting Styles	Substitute
Side Tapped	1
Side through holes	2
Cap eye	4
Head male rabbet	5
Threaded nose	6
Cap rectangular flange	7
Head flange	8
Head flange (no pilot)	9

Rod Diameter	Substitute
1/4"	1
5/16"	2
3/8"	3
1/2"	4

Note: 1/2" diameter rods are not available on Series TAE

Rod End Thread Style
(Specify "A" or "B" on all models)

Rod Size	Thd A	Thd B
1/4 ø	1/4-28	10-32
5/16 ø	5/16-24	1/4-28
3/8 ø	3/8-24	5/16-24
1/2 ø	1/2-20	7/16-20

Options	Substitute
Rod extension*	RX
Rod thread extension*	TX
Special Rod thread*	T
Plain rod end	PR
Magnetic piston**	PS
Port location (other than standard)†	L
Stop tube*†	ST
Stroke adjust (specify length of adjustment)	A
Stroke adjustment (double piston design)	AA
Viton seals	V
Piston Rod (chrome plated stainless steel)	SS
Electroless nickel plating (includes option S)	EN
Stainless steel tie rods &nuts	S
Single Acting Actuators	
Spring on Rod End	SR
Spring on Cap End	SC

* Specify length
** PS option adds 1/2" to overall length.
† Specify location

Adjustable Cushions*	
Rod end only	DR
Cap end only	DC
Both ends	D

* Add 1/2" per cushioned end.

Effective Piston Areas

To determine approximate force/lb multiply area by applicable pressure

Bore	Head End*	Cap End
3/4"	.393 sq. in.	.442 sq. in.
1"	.917 sq. in.	.994 sq. in.
1-1/8"	.884 sq. in.	.994 sq. in.

* With standard rods

Energy Absorption Capacity of Impact Dampening Seals

Size	In./Lbs of Kinetic Energy Absorbable	Pounds* Stoppable at Following Speeds 6 in/sec	12 in/sec	24 in/sec	36 in/sec	48 in/sec	60 in/sec
3/4"	1.5	32.4	8.0	2.0	.8	.41	.23
1", 1-1/8"	3	79.2	16	4	1.8	1	.59

*Pounds must include piston and rod assembly weight

Norgren.com/usa – 303.794.2611 – help@amer.norgren.com

Series TA NFPA Interchangeable

Dimensions in inches (mm)

Bore	3/4	1*	1-1/8
BC	1.06 (27)	1.41 (36)	1.59 (40)
CC	1/4-28	5/16-24	3/8-24
D	.22 (6)	.25 (6)	.31 (8)
DB	8-32	10-32	10-32
DN	.63 (16)	.88 (22)	1 (25)
E	1 (25)	1.38 (35)	1.5 (38)
EW	.25 (6)	.38 (10)	.38 (10)
KM	5/8-18	3/4-16	3/4-16
N	.75 (19)	1 (25)	1.13 (29)
NT	8-32 x 3/16 DP	10-32 x 1/4 DP	10-32 x 1/4 DP
R	.5 (13)	.88 (22)	1 (25)
RM	.63 (16)	.75 (19)	.75 (19)
RM1	.69 (18)	.81 (21)	.81 (21)
RT	8-32 x 1/4 DP	8-32 x 1/4 DP	10-32 x 1/4 DP
SD	1.31 (33)	1.25 (32)	1.25 (32)
SN	1.31 (33)	1.25 (32)	1.25 (32)
TF	1.5 (38)	1.88 (48)	2 (51)
TN	.63 (16)	.88 (22)	1 (25)
UF	2 (51)	2.38 (60)	2.5 (64)

* Piston Dia. of 1" cylinders is 1-1/8" diameter.

Style 1 – (MS9) Side Tapped

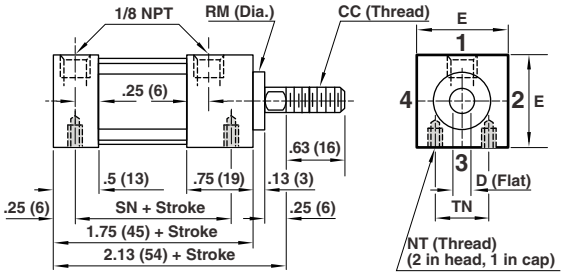

Style 3 – (MNR1) Threaded Male Rabbet*

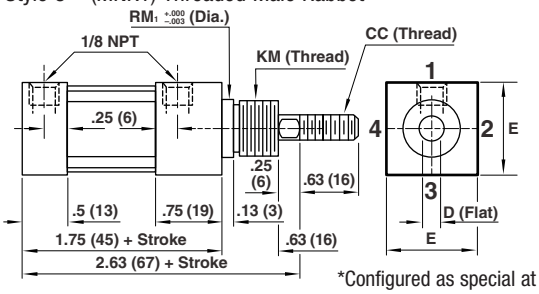

*Configured as special at factory

Style 5 – (MR1) Head Male Rabbet

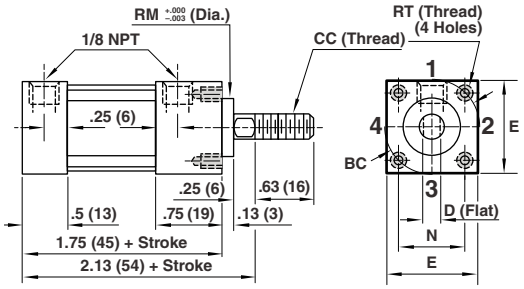

Style 7 – (MF2) Cap Rectangular Flange

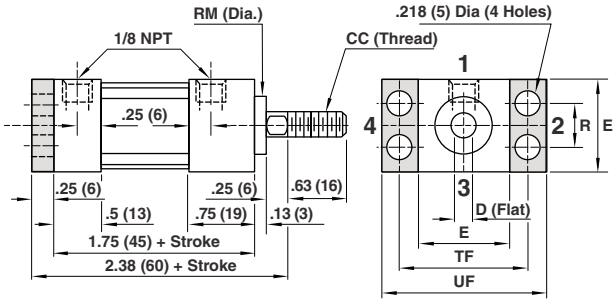

Style 9 – (MF7) Head Flange (No pilot)

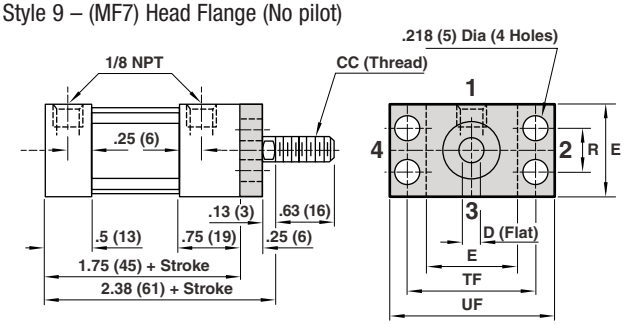

Style 2 – (MS8) Side Through Holes (not available w/oversized rod)

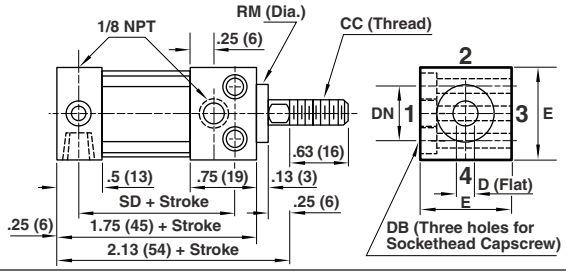

Style 4 – (MP3) Cap Eye

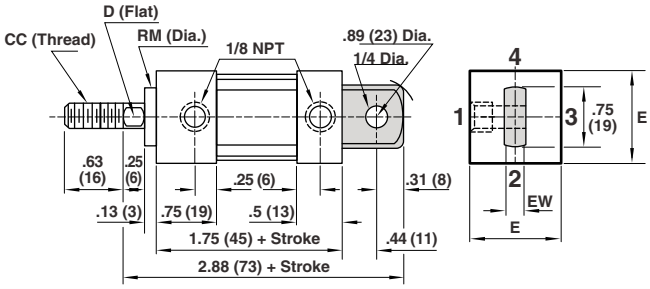

Style 6 – (MN1) Threaded Nose

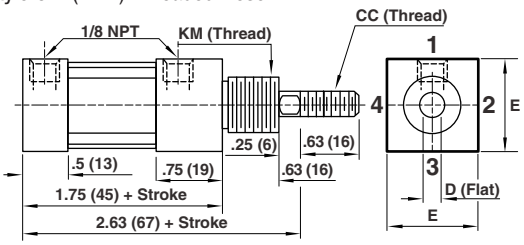

Style 8 – (MF1) Head Flange

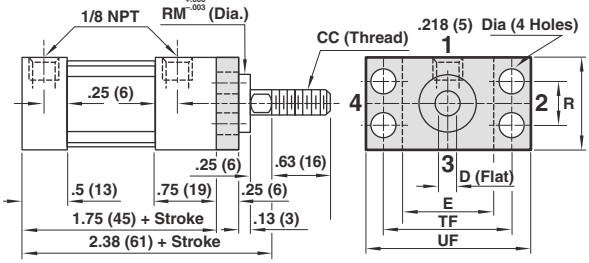

NORGREN
ENGINEERING ADVANTAGE

TAE, TAV NFPA Interchangeable

Dimensions in inches (mm)

Style 1 – (MS9) Side Tapped

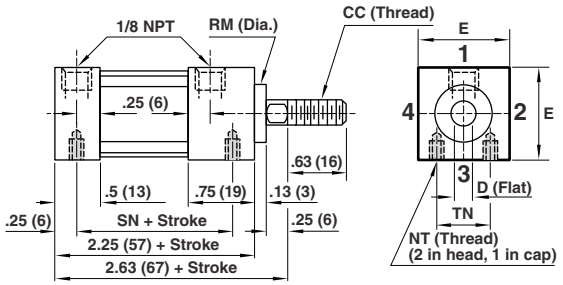

Style 2 – (MS8) Side Through Holes (not available w/oversized rod)

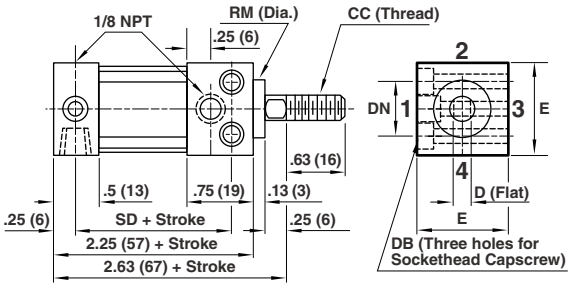

Style 3 – (MNR1) Threaded Male Rabbet*

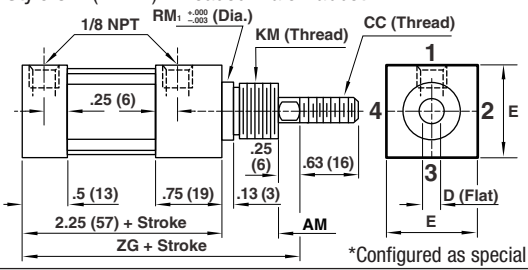

*Configured as special at factory

Style 5 – (MR1) Head Male Rabbet

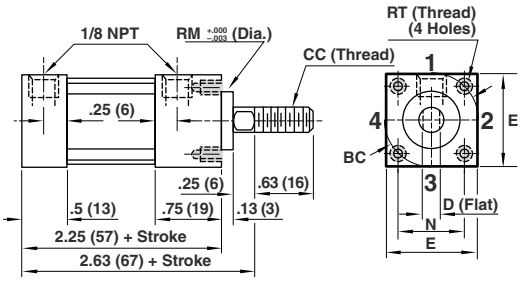

Style 7 – (MF2) Cap Rectangular Flange

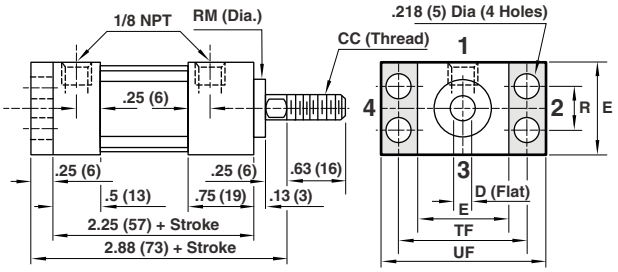

Bore	3/4	1*	1-1/8
AM	.63 (16)	.63 (16)	.88 (22)
BC	1.06 (27)	1.41 (36)	1.59 (40)
CC	1/4-28	5/16-24	3/8-24
CD	.25 (6)	.38 (10)	.38 (10)
D	.22 (6)	.25 (6)	.31 (8)
DB	8-32	10-32	10-32
DN	.63 (16)	.88 (22)	1 (25)
E	1 (25)	1.38 (35)	1.5 (38)
EW	.25 (6)	.38 (10)	.38 (10)
KM	5/8-18	3/4-16	1-14
N	.75 (19)	1 (25)	1.13 (29)
NT	8-32 x 3/16 DP	10-32 x 1/4 DP	10-32 x 1/4 DP
R	.5 (13)	.88 (22)	1 (25)
RM	.63 (16)	.75 (19)	.75 (19)
RM1	.69 (18)	.81 (21)	1.06 (27)
RT	8-32 x 1/4 DP	8-32 x 1/4 DP	10-32 x 1/4 DP
SD	1.81 (46)	1.75 (45)	1.75 (45)
SN	1.81 (46)	1.75 (45)	1.75 (45)
TF	1.5 (38)	1.88 (48)	2 (51)
TN	.63 (16)	.88 (22)	1 (25)
UF	2 (51)	2.38 (60)	2.5 (64)
ZG	3.13 (79)	3.13 (79)	3.38 (86)

* Piston Dia. of 1" cylinders is 1-1/8" diameter.

Style 4 – (MP3) Cap Eye

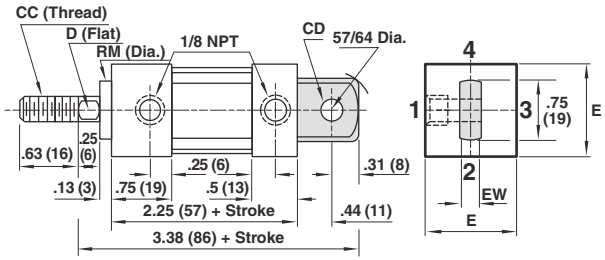

Style 6 – (MN1) Threaded Nose

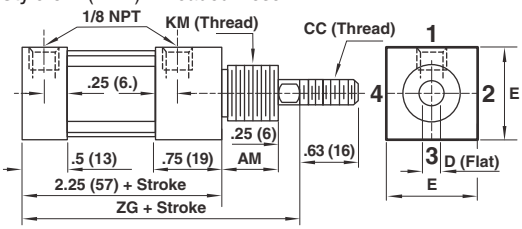

Style 8 – (MF1) Head Flange

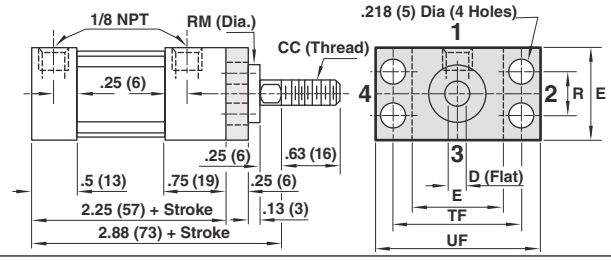

Style 9 – (MF7) Head Flange (No pilot)

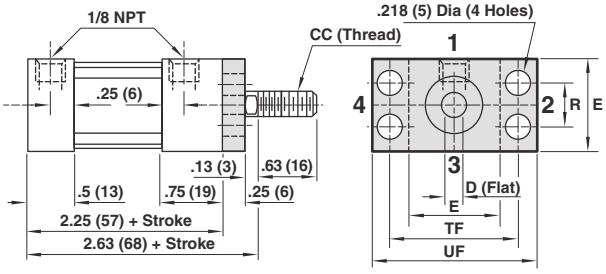

Series DTA, DTAV, DTAE (1-1/8" Bore, 5/16" and 3/8" Rods)

Dimensions in inches (mm)

Bore	3/4		1*		1-1/8	
Series	DTA	DTAE-DTAV	DTA	DTAE-DTAV	DTA	DTAE-DTAV
A	1.38 (35)		1.75 (45)		1.88 (48)	
AM	.63 (16)		.63 (16)		.63 (16)	.88 (23)
B	1.75 (45)		2.13 (54)		2.25 (57)	
BC	1.06 (27)		1.41 (36)		1.59 (40)	
CC	1/4-28		5/16-24		3/8-24	
D	.22 (6)		.25 (6)		.31 (8)	
DB	8-32		10-32		10-32	
DN	.63 (16)		.88 (22)		1 (25)	
E	1 (25)		1.38 (35)		1.5 (38)	
KM	5/8-18		3/4-16		3/4-16	1-14
LB	2 (51)	2.5 (64)	2 (51)	2.5 (64)	2 (51)	2.5 (64)
N	.75 (19)		1 (25)		1.13 (29)	
NT	8-32 x 3/16 DP		10-32 x 1/4 DP		10-32 x 1/4 DP	
R	.5 (13)		.88 (22)		1 (25)	
RM	.63 (16)		.75 (19)		.75 (19)	
RM1	.69 (18)		.81 (21)		.81 (21)	1.06 (27)
RT	8-32 x 1/4 DP		8-32 x 1/4 DP		10-32 x 1/4 DP	
SD	2.06 (52)	2.56 (65)	2 (51)	2.5 (64)	2 (51)	2.5 (64)
SN	1.56 (40)	2.06 (52)	1.5 (38)	2 (51)	1.5 (38)	2 (51)
TF	1.5 (38)		1.88 (48)		2 (51)	
TN	.63 (16)		.88 (22)		1 (25)	
UF	2 (51)		2.38 (60)		2.5 (64)	
ZB	2.75 (70)	3.25 (83)	2.75 (70)	3.25 (83)	2.75 (70)	3.25 (83)
ZR	3.25 (83)	3.75 (95)	3.25 (83)	3.75 (95)	3.25 (83)	4.0 (101)
ZT	3 (76)	3.5 (89)	3 (76)	3.5 (89)	3 (76)	3.5 (89)

* Piston Dia. of 1" cylinders is 1-1/8" diameter.

Style 1 – (MS9) Side Tapped

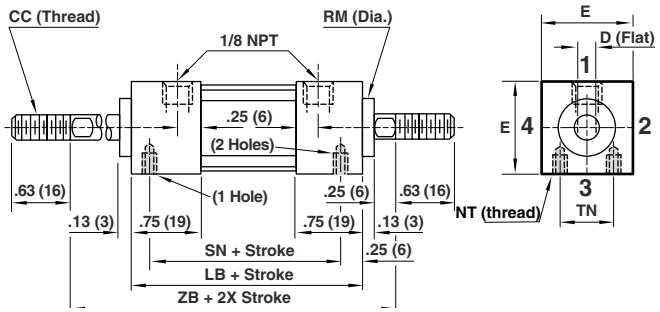

Style 2 – (MS8) Side Through Holes
(Not available with oversize rod)

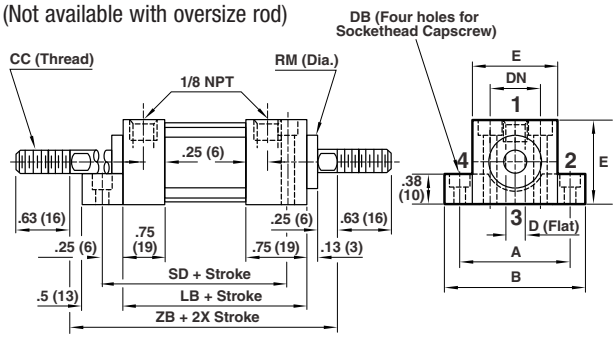

Style 3 – (MNR1) Threaded Male Rabbet*

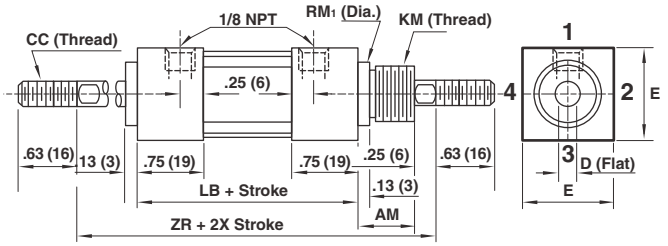

*Configured as special at factory

Style 6 – (MN1) Threaded Nose

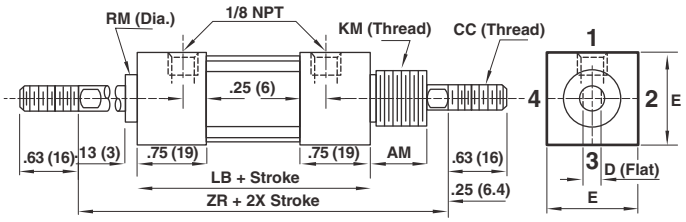

Style 9 – (MF7) Head Flange (No pilot)

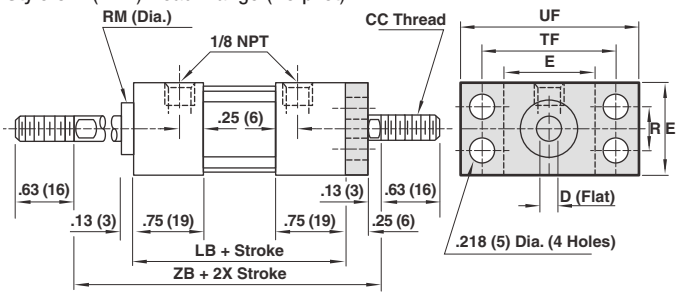

Style 5 – (MR1) Head Male Rabbet

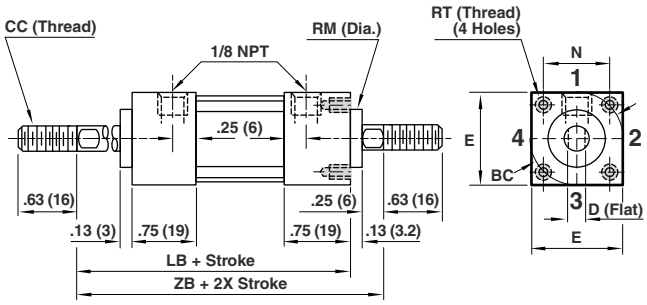

Style 8 – (MF1) Head Flange

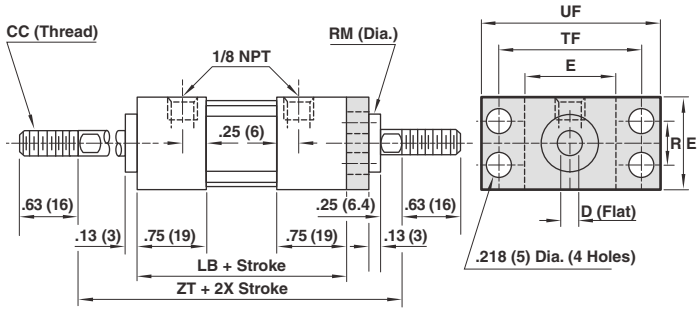

NORGREN ENGINEERING ADVANTAGE

NFPA Interchangeable Tiny Tim

Mounts for Series TA, TAV, TAE

Dimensions in inches (mm)

Pivot Pin

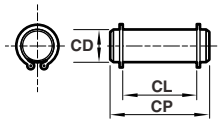

Cyl. Bore	Cyl. Series	Part No.	CD	CL	CP
3/4	All	49085	.25 (6)	.75 (19)	.94 (24)
1, 1-1/8	TA	49086	.25 (6)	.88 (22)	1.06 (27)
1, 1-1/8	TAV-TAE	49087	.38 (10)	.88 (22)	1.06 (27)

Eye Bracket

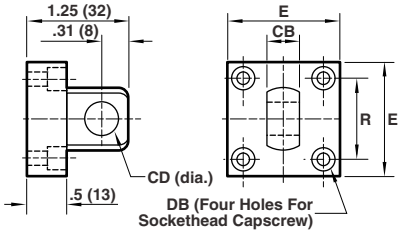

Cyl. Bore	Cyl. Series	Part No.	CD	CB	DB	E	R
3/4	TA, TAV-TAE	49069	.25 (6)	.25 (6)	6-32	1 (25)	.75 (19)
1 &	TA	49070	.25 (6)	.38 (10)	10-32	1.38 (35)	1 (25)
1-1/8	TAV-TAE	49071	.38 (10)	.38 (10)	10-32	1.38 (35)	1 (25)

Clevis Bracket (includes pin)

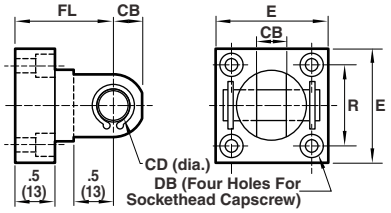

Cyl. Bore	Cyl. Series	Part No.	E	R	FL	CB	CD	DB
3/4	TA, TAV-TAE	49072	1 (25)	.75 (19)	1.19 (30)	.25 (6)	.25 (6)	6-32
1 &	TA	49073	1.38 (35)	1 (25)	1.25 (32)	.38 (10)	.25 (6)	10-32
1-1/8	TAV-TAE	49074	1.38 (35)	1 (25)	1.25 (32)	.38 (10)	.38 (10)	10-32

Rod Eye

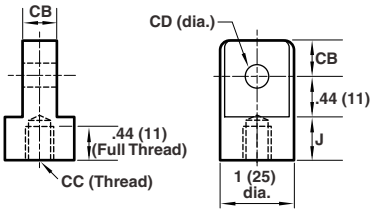

Cyl. Bore	Cyl. Series	Part No.	CC	CD	CB	I	J
3/4	TA, TAV-TAE	49075	1/4-28	.25 (6)	.25 (6)	.5 (13)	.31 (8)
	TA	49076	5/16-24	.25 (6)	.38 (10)	.75 (19)	.44 (11)
1	TAV-TAE	49077	5/16-24	.38 (10)	.38 (10)	.75 (19)	.44 (11)
	TA	49078	3/8-24	.25 (6)	.38 (10)	.75 (19)	.44 (11)
1-1/8	TAV-TAE	49079	3/8-24	.38 (10)	.38 (10)	.75 (19)	.44 (11)

Rod Clevis (includes pin)

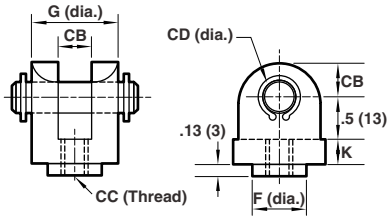

Cyl. Bore	Cyl. Series	Part No.	CB	CD	F	G	K	CC
3/4	TA, TAV-TAE	49080	.25 (6)	.25 (6)	.44 (11)	.75 (19)	.19 (5)	1/4-28
	TA	49081	.38 (10)	.25 (6)	.56 (14)	.88 (22)	.25 (6)	5/16-24
1	TAV-TAE	49082	.38 (10)	.38 (10)	.56 (14)	.88 (22)	.25 (6)	5/16-24
	TA	49083	.38 (10)	.25 (6)	.56 (14)	.88 (22)	.25 (6)	3/8-24
1-1/8	TAV-TAE	49084	.38 (10)	.38 (10)	.56 (14)	.88 (22)	.25 (6)	3/8-24

Norgren.com/usa – 303.794.2611 – help@amer.norgren.com

NFPA Interchageable Rod Aligner for Series TA, TAV, TAE

Dimensions in inches (mm)

Rod Aligners (includes jam nut)

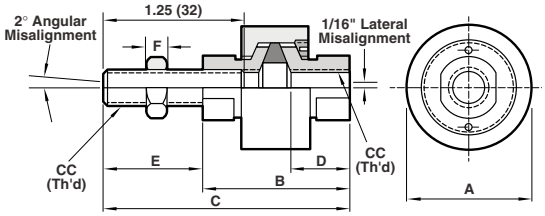

Model	A	B	C	D	E	F	CC
RA-25	1 (25)	1.38 (35)	2.13 (54)	.5 (13)	.75 (19)	.16 (4)	1/4-28
RA-32	1 (25)	1.38 (35)	2.13 (54)	.5 (13)	.75 (19)	.19 (5)	5/16-24
RA-38	1 (25)	1.38 (35)	2.13 (54)	.5 (13)	.75 (19)	.19 (5)	3/8-24
RA-44	1.5 (38)	1.78 (45)	3 (76)	.69 (18)	1.22 (31)	.22 (6)	7/16-20
RA-50	1.5 (38)	1.78 (45)	3 (76)	.69 (18)	1.22 (31)	.25 (6)	1/2-20

Oversize Rods – Optional Rod End Styles

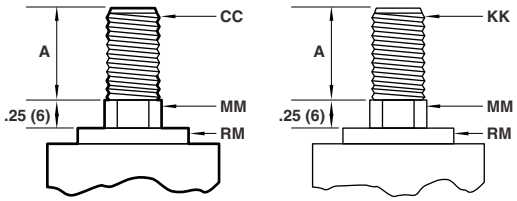

Bore	Rod Size	MM	CC (Style A)	A	KK (Style B)	D	RM
3/4"	1	.25 (6)	1/4-28	.63 (16)	10-32	.22 (6)	.63 (16)
3/4"	2	.31 (8)	5/16-24	.63 (16)	1/4-28	.25 (6)	.63 (16)
1"	2	.31 (8)	5/16-24	.63 (16)	1/4-28	.25 (6)	.63 (16)
1"	3	.38 (10)	3/8-24	.63 (16)	5/16-24	.31 (8)	.75 (19)*
1"	4	.50 (31)	1/2-20	.75 (19)	7/16-20	.44 (11)	.75 (19)*
1-1/8"	3	.38 (10)	3/8-24	.63 (16)	5/16-24	.31 (8)	.75 (19)*
1-1/8"	4	.50 (31)	1/2-20	.75 (19)	7/16-20	.44 (11)	.75 (19)*

* RM (Dia.) on Series TAV and DTAV 1" & 1-1/8" Sizes in Mounting Styles 5 and 8 is 1".

Note: Oversize rods are not available in Style 2, sizes 3/4" and 1" due to interference with the rod gland.
See ACT-5-18 for cylinders equipped with modified rods or other optional equipment.

Other options

High temperature seals

Available for all seals and bore sizes when normal service requires the cylinder to operate at ambient temperatures ranging above 200° to 350°F (93° to 177°C). Specify Viton.

Single Acting, Spring Return Actuators

Available for all Series and bore sizes. Add two times working stroke to envelope dimensions.

Adjustable Cushions

Insert type adjustable cushions are available when required. Add 1/2" to cylinder length per cushioned end.

Note: Not available with 1/2" diameter rods.

NORGREN
ENGINEERING ADVANTAGE

Rack & Pinion Rotary Actuators

Single, Double, and Integral Air/Oil Tandem Rack & Pinion Mini Rotary Actuators

(ø1/2" & 3/4" Bores)

Single Rack and Pinion Mini Rotary Actuators are very compact.

Rotation angles 45°, 90°, and 180° standard.

Nitrile Noise Dampening Bumpers optional.

Viton® Seals optional for higher temperatures.

Optional Low Friction Seals.

Body Mount or optional Angle Bracket, Front and Rear Flange Mountings.

Technical data

Medium:

Filtered compressed air to 150 PSI (10 Bar)

Operating Temperature:

-20°F to 200°F (-29°C to 93°C) with Standard Nitrile Seals

-20°F to 400°F (-29°C to 204°C) with Viton® Seals

-20°F to 250°F (-29°C to 121°C) with Low Friction Seals

Operating Pressure:

150 PSI (10 Bar)

Angle of Rotation:

45°, 90°, 180° Standard

Other rotations available

Rotational Tolerance:

-0° + 1/2°

Backlash Between Rack & Pinion:

2 position units less than 1° of arc maximum

NOTE: For 0° backlash at each end of rotation, specify a double rack actuator with rotation adjustments.

Lubrication:

None required

Norgren Rotary Actuators are rated for "no lube added" service. All internal components are lubricated at the time of assembly with a Teflon® based grease. Recommended fluid for air/oil tandem is petroleum based hydraulic oil, non-foaming, non-detergent ISO Viscosity grade of 46.

Materials

End Caps: Black anodized 6061-T6 aluminum

Body: 6061-T6 aluminum alloy, entirely black anodized

Gear Rack: Ground and polished stress proof steel

Pinion Gear and Output Shaft: Manufactured as one piece from high strength steel.

Shaft Bearings: SAE 841 Bronze

Standard Seals: Nitrile

Ordering information

Model codes

1 7 0 C B - 2 B A - A A 5 0 V
1 2 3 4 5 6 7 8 9 10 11 12 13

Bore

1/2"	0
3/4"	1

Rack/Rotary Type

Single Rack Standard Seals	0
Single Rack Low Friction Seals	1
Double Rack Low Friction Seals	2
Double Rack Standard Seals	5
Double Rack Integral A/O Tandem Standard Seals (ø 3/4" Bore only in mini rotary)	7

Multiple Position Actuator

2 Position	0
Special	X

Rotation

45°	A
90°	B
180°	C
Special	X

Output Shaft

Single End Keyway Standard	A
Double End Keyway	B
Special	X

Mounting

Standard	1
Front Flange	2
Rear Flange	3
Angle Bracket	5
Special	X

Options

No Option	0
Electroless Nickel	E
Viton® Seals	V
Special (Specify)	X

Switches

N/A	0

Rotation Adjustments

No Adjustment	1
End Cap A	2
End Cap B	3
End Caps A & B	4
End Caps B & D	5
Special	X

Bumper

No Bumpers	A
End Cap A	B
End Cap B	C
All Caps	D

Flow Controls

N/A	A

Cushions

N/A	A

Port & Location

Port Position 1	A*
Port Position 2	B
Port Position 3	C
Port Position 4	D
Port Position 5	F

*Standard Port Location

EXAMPLE: Mini Rotary Actuator 3/4" Bore – Double Rack Integral Air/Oil Tandem Mini Rotary Actuator – 2 Position – 180° Rotation – Double End Keyway Output Shaft – Front Flange Mounting – Port Position 2 – No Bumpers – Rotation Adjustment End Caps B & D – Viton® Seals.

Norgren.com/usa – 303.794.2611 – help@amer.norgren.com

Rack & Pinion Rotary Actuators

Single, Double, and Integral Air/Oil Tandem Rack & Pinion Mini Rotary Actuators

(ø1/2" & 3/4" Bores)

Mini Rotary Actuators are constructed with the finest materials for each component!

1 Seals: Lip type, pressure sensitive nitrile seals are wear compensating for long service life and minimum friction.

2 Gear Rack and Piston: One-piece construction, ground and polished, stress-proof steel.

3 Actuator Body: Precision machined from 6061-T6, 40,000 PSI minimum yield aluminum alloy for strength. The entire body is then black anodized for maximum wear and corrosion resistance.

Double Rack Shown

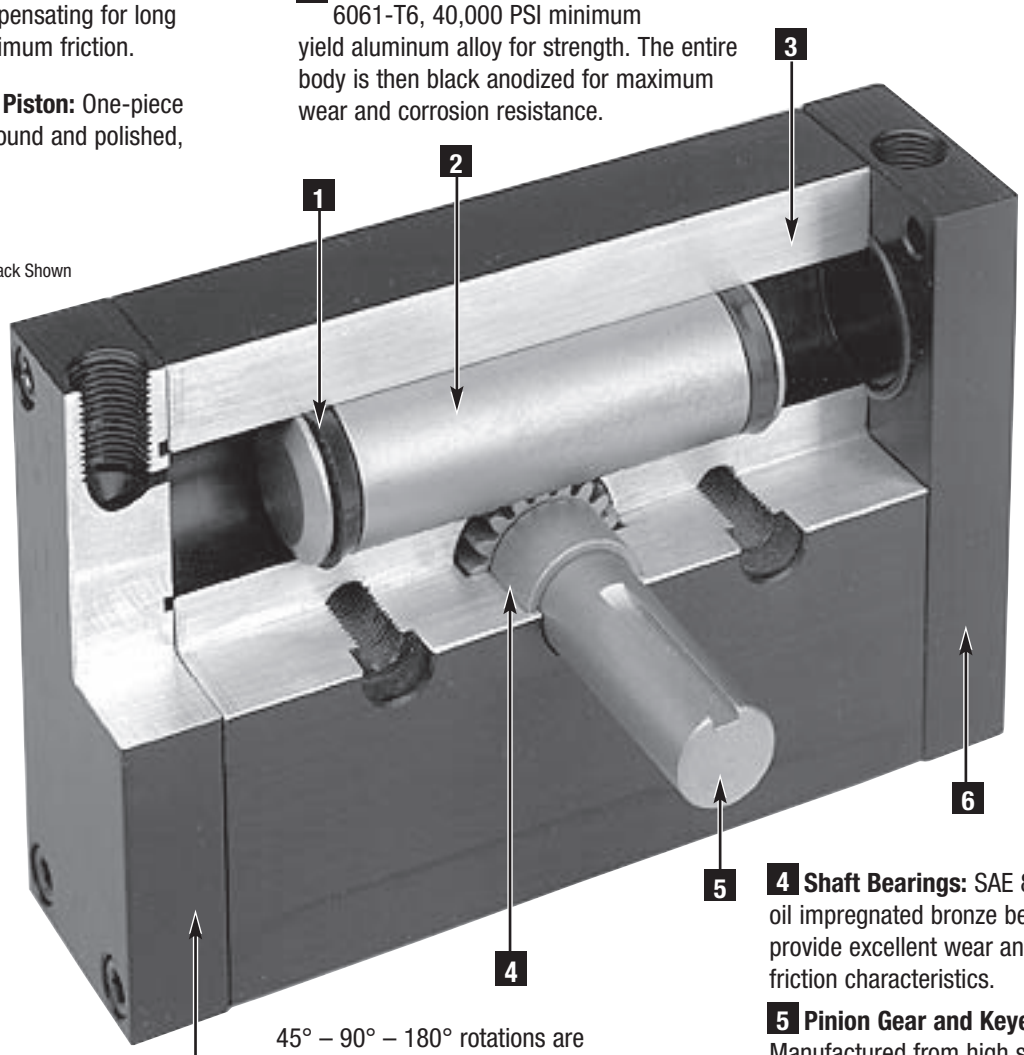

45° – 90° – 180° rotations are standard and available in single or double rack models.

4 Shaft Bearings: SAE 841 oil impregnated bronze bearings provide excellent wear and low friction characteristics.

5 Pinion Gear and Keyed Output Shaft: Manufactured from high strength steel and precision machined as one piece. The gear/shaft can be easily removed and reinserted to satisfy a variety of keyway orientation requirements.

6 End Caps: Machined from 6061-T6 solid aluminum bar that is anodized for corrosion resistance.

Seal Kits

Bore	Standard Part No.	Low Friction Part No.	Viton® Part No.	Air/Oil Tandem Part No.
1/2"" Single Rack	000SK	000TK	000VK	We recommend that Air/Oil Tandems are returned to the factory for repair.
1/2"" Double Rack	050SK	050TK	050VK	
3/4" Single Rack	100SK	100TK	100VK	
3/4" Double Rack	150SK	150TK	150VK	

Torque Output

Theoretical Torque Output in Inch-pounds (Newton-meters)

Bore Size	Series	PSI (bar) 40(2.8)	60(4.1)	80(5.5)	90(6.2)	100(6.9)	125(8.6)	150 (10.3)	Inch pounds per PSI	(Newton-meters per Bar)
1/2" Single Rack	000	2.0 (.23)	2.9 (.33)	3.9 (.44)	4.4 (.50)	4.9 (.50)	6.1 (.69)	7.4 (.84)	.049	(.080)
1/2" Double Rack	050	4.0 (.45)	5.8 (.66)	7.8 (.88)	8.8 (1.00)	9.8 (1.11)	12.2 (1.38)	14.8 (1.67)	.098	(.160)
3/4" Single Rack	100	6.6 (.75)	9.9 (1.12)	13.3 (1.50)	14.9 (1.68)	16.5 (1.86)	20.7 (2.33)	24.8 (2.80)	.165	(.270)
3/4" Double Rack	150	13.2 (1.49)	19.8 (2.24)	26.6 (3.0)	29.8 (3.37)	33.0 (3.73)	41.4 (4.68)	49.6 (5.60)	.330	(.540)

NOTE: Deduct 10% from torque output for frictional loss. ø3/4" Air/Oil Tandem has the torque output of a Single Rack unit: deduct 20% for frictional loss.

Basic Dimensions Single Rack and Pinion Mini Rotary Actuator

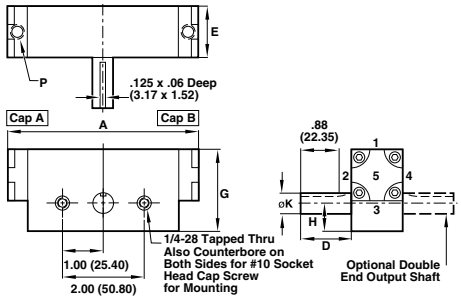

Bore	A	D	E	G	H	øK	P
1/2"	3.50 (89)	1.06 (27)	1.00 (25)	1.50 (38)	.59 (15)	.375 (9.53)	10-32
3/4"	4.88 (124)	1.25 (32)	1.25 (32)	2.00 (51)	.69 (18)	.500 (12.70)	1/8 NPT

Basic Dimensions Double Rack and Pinion Mini Rotary Actuator

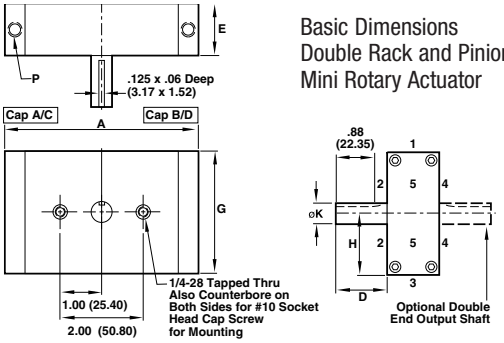

Bore	A	D	E	G	H	øK	P
1/2"	3.75 (95)	1.06 (27)	1.00 (25)	2.50 (64)	1.25 (32)	.375 (9.53)	1/8 NPT
3/4"	4.75 (121)	1.25 (32)	1.25 (32)	3.00 (76)	1.50 (38)	.500 (12.70)	1/8 NPT

Basic Dimensions Double Rack and Pinion Mini Rotary Actuator with Integral Air-Oil Tandem

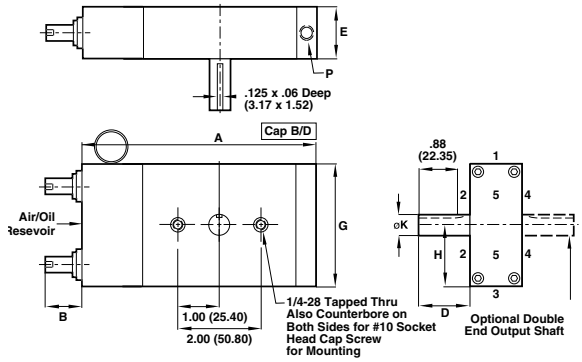

Bore	A	B	D	E	G	H	øK	P
3/4"	5.75 (121)	.3125 (8)	1.25 (32)	1.25 (32)	3.00 (76)	1.50 (38)	.500 (12.70)	.1/8 NPT

Port Positions Single Rack

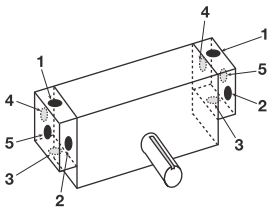

Port Positions Double Rack without Rotation Adjustment

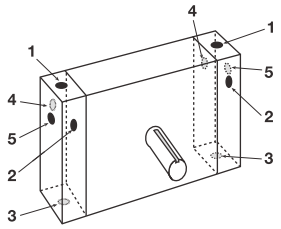

Port Positions Integral Double Rack

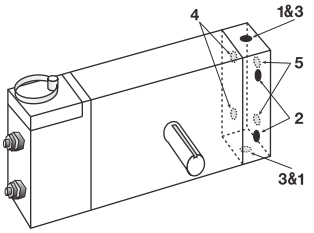

Port Positions Double Rack with Rotation Adjustment

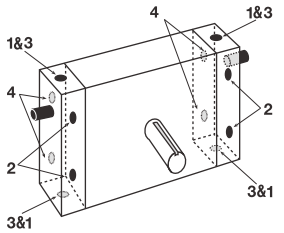

Single Rack

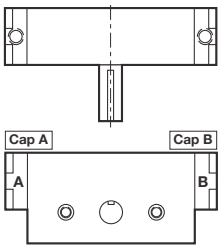

Double Rack

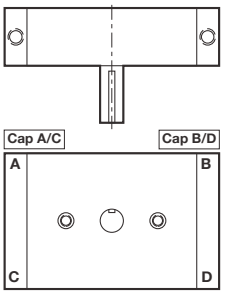

Integral Air/Oil Tandem Double Rack

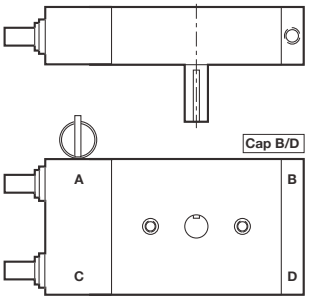

Rack & Pinion Rotary Actuators

Single, Double, and Integral Air/Oil Tandem Rack & Pinion Rotary Actuators

(ø1-1/8" & 2-1/2" Bores)

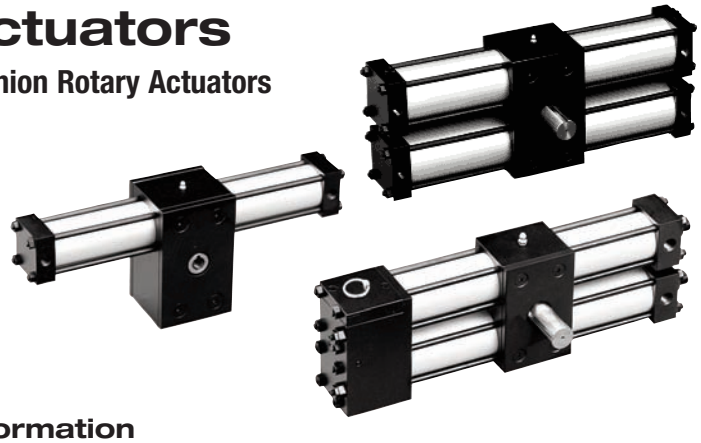

Features

Single Rack and Pinion Rotary Actuators are designed for non-lube added service.
Rotation angles 45°, 90°, 180°, 270, and 360° standard.
Urethane Noise Dampening Bumpers optional.
Viton® Seals optional for higher temperatures.
Optional Low Friction Seals.
Body Mount or optional Angle Bracket, Front and Rear Flange Mountings.
Adjustable Cushions optional Flow Controls
Optional Intregal Air/Oil optional

Technical data

Medium:
Filtered compressed air to 150 PSI Petroleum based hydraulic fluid to 400 PSI

Operating Temperature:
-20° to 200°F (-29°C to 93°C) with Standard Nitrile Seals
-20° to 400°F (-29°C to 204°C) with Viton® Seals
-20° to 250°F (-29°C to 121°C) with Low Friction Seals

Operating Pressure:
150 PSI (10 Bar)
400 PSI (27.6 Bar) Hydraulic (non-shock)

Angle of Rotation:
45°, 90°, 180°, 270°, 360° Standard
Any rotation up to 1080° can be supplied

Rotational Tolerance:
-0° + 10°

Backlash Between Rack & Pinion:
1-1/8" Bore 2 position units 1° of arc maximum
1-1/2" – 2-1/2" Bore 2 position units 30 minutes of arc maximum

Lubrication:
None required
Norgren Rotary Actuators are rated for "no lube added" service. All internal components are lubricated at the time of assembly with a Teflon® based grease. Should additional lubrication become necessary between the radial surface of the rack gear and the rack/pinion mesh area due to severe operating conditions, a grease fitting is provided.

Materials
End Caps: Black anodized 6061-T6 aluminum
Body: 6061-T6 aluminum alloy, entirely hard coat anodized
Gear Rack: Ground and polished stress-proof steel
Pinion Gear and Output Shaft: Manufactured from high-strength steel.
Shaft Bearings: Sealed, single row ball bearings
Standard Seals: Nitrile
Tube: 6063-T832 aluminum alloy
Tie Rods: Stress-proof steel
Floating Pistons: Solid aluminum alloy

Ordering information

Model codes

2 5 0 C B - 1 B B - A D 3 M E
1 2 3 4 5 6 7 8 9 10 11 12 13

Bore

1-1/8"	2
1-1/2"	3
2"	4
2-1/2"	5

Rack/Rotary Type

Single Rack Standard Seals	0
Single Rack Low Friction Seals	1
Double Rack Low Friction Seals	2
Double Rack Standard Seals	5
Standard Air/Oil Tandem	6
Integral Air/Oil Tandem	7
Special	X

Multiple Position Actuator

2 Position	0
3 Position	3
4 Position	4
5 Position	5
Special	X

Rotation

45°	A
90°	B
180°	C
270°	D
360°	E
Special	X

Output Shaft

Single End Keyway Standard	A
Double End Keyway	B
Hollow Internal Keyway	C
Cross Keyway	D
Preloaded Keyway	E
Special	X

Mounting

Standard	1
Front Flange	2
Rear Flange	3
Bottom Flange	4
Special	X

Port Location

Position	1	2	3	4	5
Standard	A	B*	C	D	F
Oversized	E	G	H	J	K
Special			X		

*Standard Port Size and Location.

EXAMPLE: 11/8" Bore – Double Rack with Standard Seals – 2 Position Rotary Actuator – 180° Rotation – Double End Keyway – Standard Mounting – Standard Port Located at Position 2 – Cushion Position 1 in End Cap A – No Flow Controls – Bumpers on All Caps – End Cap B Rotation Adjustments – Standard Magnetic Piston Option – Electroless Nickel Plated.

Options

No Option	0
Electroless Nickel	E
O-Ring Loaded Piston Seals	P
Viton® Seals	V
Special (Specify)	X

Magnetic Option

No Magnet	0
Standard Magnetic Piston in Position A & B	M
Integral Air/Oil Tandems in Position B & D	

Rotation Adjustments

No Adjustment	1
End Cap A	2
End Cap B	3
End Caps A & B	4
End Caps B & D	5
Special	X

Note: Standard rotation adjustments provide 30° of angle reduction.

Bumper

No Bumpers	A
End Cap A	B
End Cap B	C
All Caps	D
Special	X

Flow Controls

Needle Position	1	2	3	4
No Flow Controls		A		
End Cap A	B	C	D	E
End Cap B	G	H	J	K
End Caps A & B	M	N	P	R
Special		X		

Note: Flow Controls must be 90° to Port Location. Flow controls are Standard on all Air/ Oil Tandems. Standard Air/ Oil Tandem Flow Controls are in end caps A & C in position #2. Integral Air/ Oil Tandem Flow Controls are in position #5.

Cushions

Needle Position	1	2	3	4
No Cushions		A		
End Cap A	B	C	D	E
End Cap B	G	H	J	K
End Caps A & B	N	M	P	R
Special		X		

Note: Cushions & Rotation Adjustment cannot be located in same end cap.

NORGREN ENGINEERING ADVANTAGE

Rotary Actuators are constructed with the finest materials for each component!

1 Floating Pistons: Solid aluminum alloy, lightweight for low inertia, yet strong. Provide excellent wear characteristics against the hard coated tube I.D.

2 Seals: Lip type, pressure sensitive nitrile seals are wear compensating for long service life and minimum friction.

3 Actuator Body: Precision machined from 6061-T6, 40,000 PSI minimum yield aluminum alloy for strength. The entire body is then hard-anodized for maximum wear and corrosion resistance.

4 Grease Fitting: Easy access for additional lubrication. Single rack located on top; double located on top and bottom.

5 Retainers: Aluminum plates are located on the front and rear of the actuator body to ensure positive retention of the pinion/shaft/bearing assembly.

6 Tie Rods: Stress-proof steel to maintain compression on the tube end seals.

Single Rack Shown

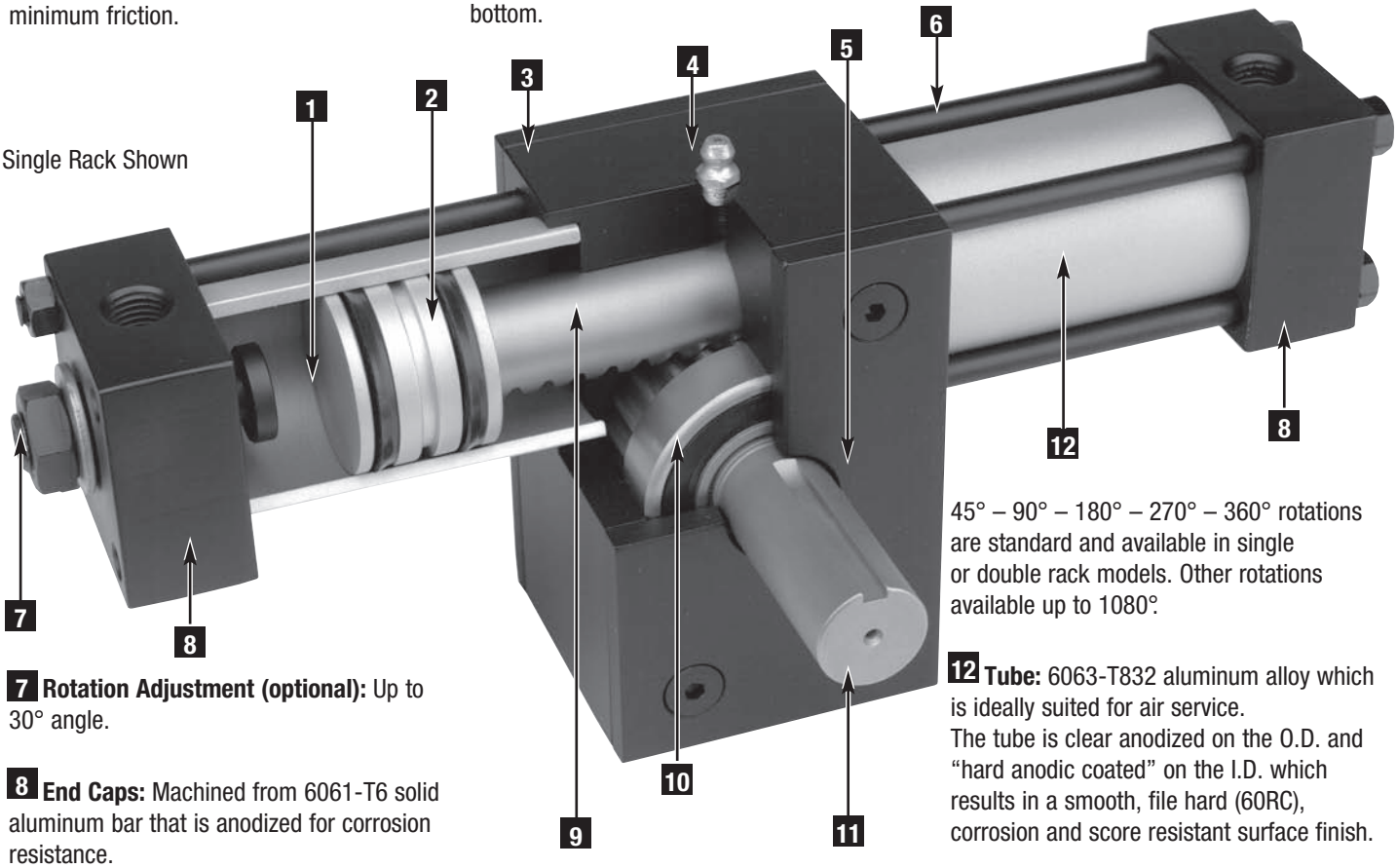

45° – 90° – 180° – 270° – 360° rotations are standard and available in single or double rack models. Other rotations available up to 1080°.

7 Rotation Adjustment (optional): Up to 30° angle.

8 End Caps: Machined from 6061-T6 solid aluminum bar that is anodized for corrosion resistance.

9 Rack: Ground and polished stress-proof steel.

10 Shaft Bearings: Sealed, single row ball bearings provide exceptional shaft stability with a low coefficient of friction.

11 Pinion and Output Shaft: Manufactured from high strength steel for maximum strength and endurance. A keyed output shaft is standard with other shaft options available.

12 Tube: 6063-T832 aluminum alloy which is ideally suited for air service. The tube is clear anodized on the O.D. and "hard anodic coated" on the I.D. which results in a smooth, file hard (60RC), corrosion and score resistant surface finish.

Options not shown: Low Friction Seals, Cartridge Speed Controls,High Temperature Viton® Seals, Adjustable Cushions, Bumpers, Magnetic Piston for Position Sensing, Multi-Position Rotation Capabilities.

Seal Kits

Bore	Standard Part No.	Low Friction Part No.	Viton® Part No.	Air/Oil Tandem Part No.
1 1/8" Single Rack	200SK	200TK	200VK	We recommend that Air/Oil Tandems are returned to the factory for repair.
1 1/8" Double Rack	250SK	250TK	250VK	
1 1/2" Single Rack	300SK	300TK	300VK	
1 1/2" Double Rack	350SK	350TK	350VK	
2" Single Rack	400SK	400TK	400VK	
2" Double Rack	450SK	450TK	450VK	
2 1/2" Single Rack	500SK	500TK	500VK	
2 1/2" Double Rack	550SK	550TK	550VK	

Rotational Velocity

Maximum rotational velocity of a rotary actuator is difficult to determine due to varying factors such as pressure, medium, flow and external loading. Excessive speeds in a given application can create inertia loads whose shock values could prove detrimental to the actuator. Use of external stops, cushions, or other deceleration devices will ensure maximum performance and actuator life.

Norgren.com/usa – 303.794.2611 – help@amer.norgren.com

Rack & Pinion Rotary Actuators

Single, Double, and Integral Air/Oil Tandem Rack & Pinion Rotary Actuators

(ø1-1/8" & 2-1/2" Bores)

Basic Dimensions for Single and Double Rack and Pinion Rotary Actuator

Dimensions in inches (mm)

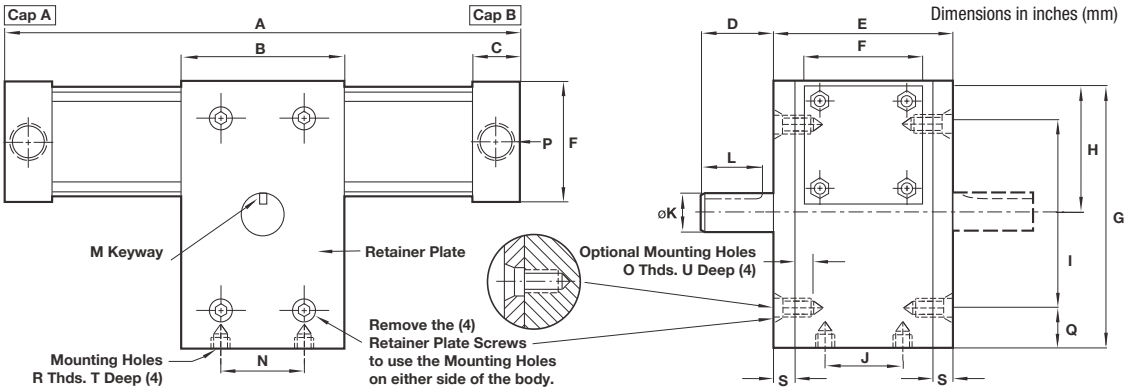

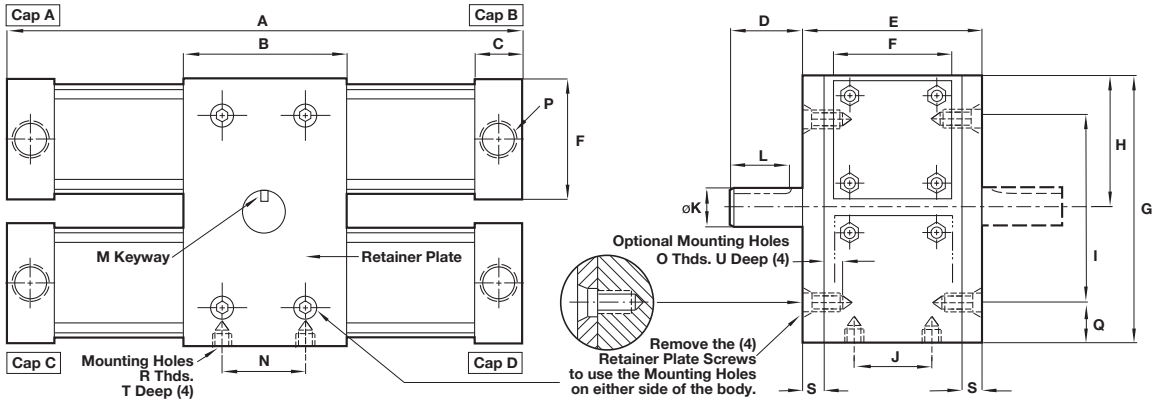

Dimension	Degree Rotation	1-1/8" Bore Single Rack		1-1/2" Bore Single Rack		2" Bore Single Rack		2-1/2" Bore Single Rack	
A	0°.	4.500	(114)	6.500	(165)	7.750	(197)	8.000	(203)
	45°	5.590	(142)	8.025	(204)	10.195	(259)	10.445	(265)
	90°	6.571	(167)	9.397	(239)	12.395	(315)	12.645	(321)
	180°	8.533	(217)	12.142	(308)	16.796	(427)	17.046	(433)
	270°	10.495	(267)	14.887	(378)	21.197	(538)	21.447	(545)
	360°	12.457	(316)	17.632	(448)	25.598	(650)	25.848	(657)
	Add per °	.0218	(0.55)	.0305	(0.77)	.0489	(1.24)	.0489	(1.24)
AA		.312	(7.92)	.500	(12.70)	.688	(17.48)	1.000	(25.40)
B		2.250	(57)	2.750	(70)	4.000	(102)	4.000	(102)
BB		.093	(2.36)	.125	(3.18)	.187	(4.75)	.187	(4.75)
C		.625	(16)	1.000	(25)	1.000	(25)	1.000	(25)
CC		.047	(1.19)	.060	(1.52)	.093	(2.36)	.093	(2.36)
D		.875	(22)	1.750	(44)	2.031	(52)	2.031	(52)
DD		.234	(5.94)	.250	(6.35)	.500	(12.70)	.500	(12.70)
E		2.250	(57)	2.687	(68)	3.718	(94)	3.718	(94)
EE		.250	(6.35)	.250	(6.35)	.437	(11.10)	.437	(11.10)
F		1.500	(38)	2.000	(51)	2.500	(64)	3.000	(76)
FF		.500	(12.70)	.750	(19.15)	1.125	(28.58)	1.125	(28.58)
G		3.312	(84)	4.375	(111)	6.604	(168)	6.604	(168)
H		1.656	(42)	2.187	(56)	3.302	(84)	3.302	(84)
I		2.406	(61)	3.187	(81)	4.878	(124)	4.878	(124)
J		1.000	(25)	1.500	(38)	1.500	(38)	1.500	(38)
øK		.500	(12.70)	.875	(22.23)	1.125	(28.58)	1.125	(28.58)
L		.625	(16)	1.500	(38)	1.875	(47)	1.875	(47)
M		1/8 x 1/16		3/16 x 3/32		1/4 x 1/8		1/4 x 1/8	
N		1.500	(38)	1.500	(38)	2.000	(51)	2.000	(51)
O		1/4-20		1/4-20		7/16-14		7/16-14	
P		1/8 NPT		1/4 NPT		1/4 NPT		1/4 NPT	
Q		.453	(12)	.594	(15)	.863	(22)	.863	(22)
R		1/4-20		5/16-24		1/2-20		1/2-20	
S		.250	(6)	.250	(6)	.375	(10)	.375	(10)
T		.250	(6)	.313	(8)	.500	(13)	.500	(13)
U		.250	(6)	.438	(11)	.438	(11)	.438	(11)

NORGREN ENGINEERING ADVANTAGE

Rack & Pinion Rotary Actuators

Single, Double, and Integral Air/Oil Tandem Rack & Pinion Rotary Actuators

(ø1-1/8" & 2-1/2" Bores)

4-Position Rotary Actuator

R° = Rotation of base unit in degrees (Positions 1 and 4)
S° = Change in rotation of base unit (Position 2)
T° = Change in rotation of base unit (Position 3)

5-Position Rotary Actuator

R° = Rotation of base unit in degrees
S° = Change in rotation of base unit (Position 2)
T° = Change in rotation of base unit (Position 3)
Z° = Change in rotation of base unit (Position 4)

Shaft Options

Internal Keyed Hollow
Shaft can be utilized from either side and is flush with retaining plates.
2" bore – 1.00" (25.4) hollow-optional
2-1/2" bore – .688" (17.48) hollow-optional

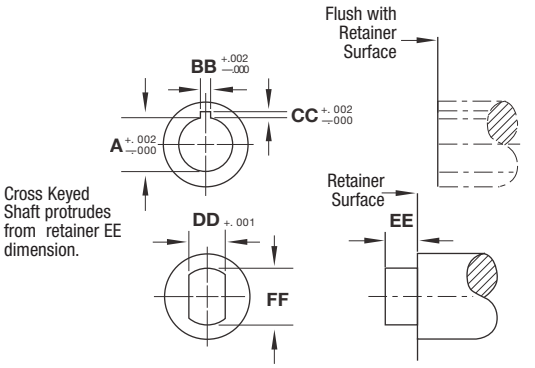

3 Position Rotary Actuator*

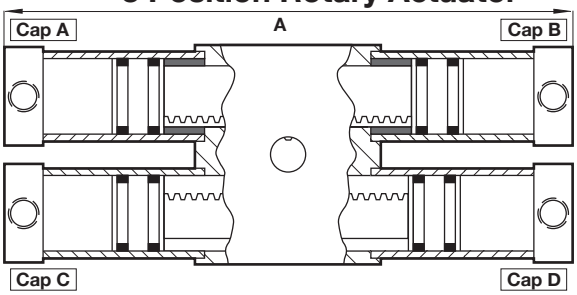

*3 position actuator is dimensionally interchangable with 2 position.

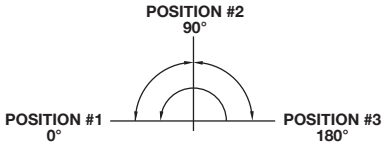

Output Shaft Position Number	Pressurize Port(s) in Cap(s)	Exhaust
1	C	All other ports
2	A & B	All other ports
3	D	All other ports

4 Position Rotary Actuator

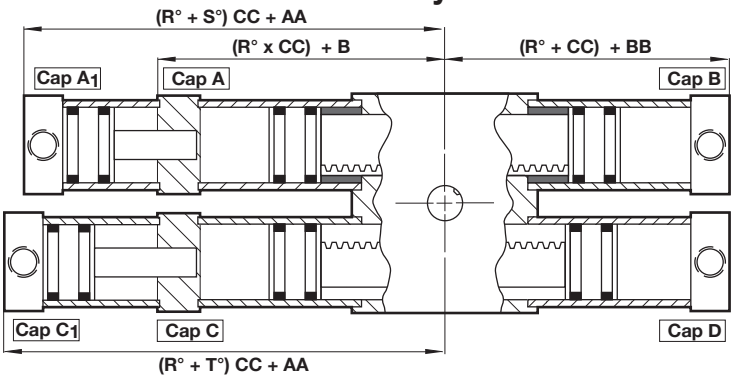

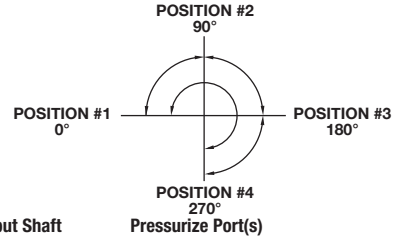

Output Shaft Position Number	Pressurize Port(s) in Cap(s)	Exhaust
1	C	All other ports
2	A_1 & C_1	All other ports
3	A & B	All other ports
4	D	All other ports

5 Position Rotary Actuator

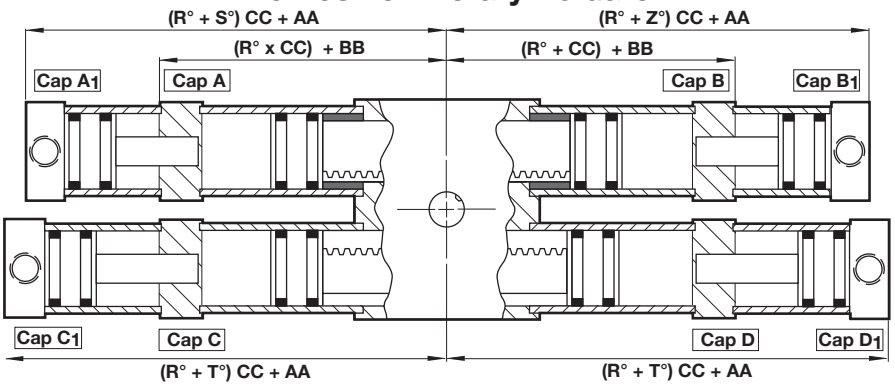

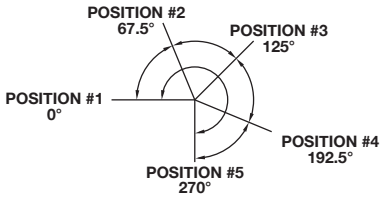

Output Shaft Position Number	Pressurize Port(s) in Cap(s)	Exhaust
1	C	All other ports
2	A_1 & C_1	All other ports
3	A & B	All other ports
4	B_1 & D_1	All other ports
5	D	All other ports

Norgren.com/usa – 303.794.2611 – help@amer.norgren.com

Rack & Pinion Rotary Actuators

Standard Air/Oil Tandem is supplied with an Air/Oil Tank.
Air/Oil Tank should have 20 PSI pressure header.
Integral Air/Oil Tandem is fully self-contained.
The simplicity of compressed air with the smooth control of hydraulics.
Provides extremely smooth, fully adjustable speed control of the actuator output shaft.

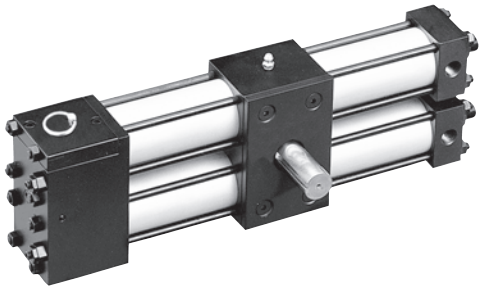

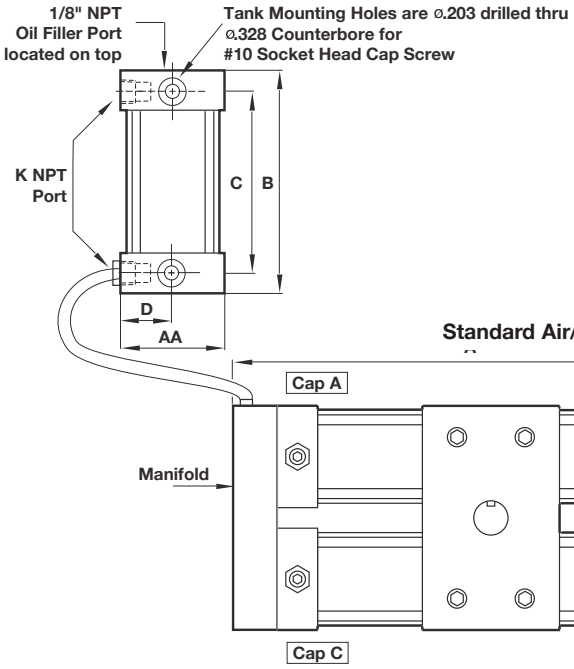

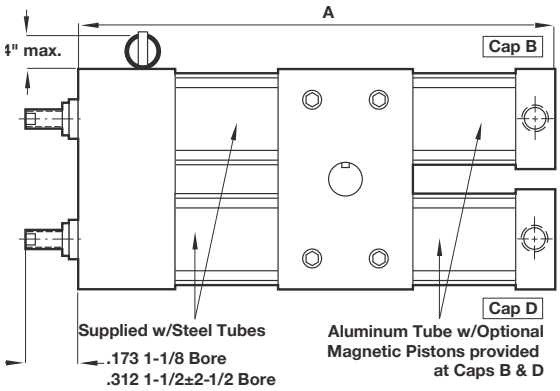

Length Dimensions for Air/Oil Tandems

Dimension	Degree Rotation	1-1/8" Standard		1-1/2" Standard		2" Standard		2-1/2" Standard	
A	0°	5.125	(130)	7.500	(191)	8.750	(222)	9.000	(229)
	45°	6.215	(158)	9.025	(292)	11.195	(284)	11.445	(291)
	90°	7.196	(183)	10.397	(264)	13.395	(340)	13.645	(347)
	180°	9.158	(233)	13.142	(333)	17.796	(452)	18.046	(458)
	270°	11.121	(282)	15.887	(404)	22.197	(563)	22.447	(570)
	360°	13.082	(332)	18.632	(473)	26.598	(676)	26.848	(682)
Dimension	Degree Rotation	1-1/8" Integral		1-1/2" Integral		2" Integral		2-1/2" Integral	
A	0°	6.125	(156)	8.000	(203)	9.500	(241)	10.000	(254)
	45°	7.215	(183)	9.525	(242)	11.945	(303)	12.445	(316)
	90°	8.196	(208)	10.897	(277)	14.145	(359)	14.645	(372)
	180°	10.158	(258)	13.642	(347)	18.546	(471)	19.046	(484)
	270°	12.120	(308)	16.387	(416)	22.947	(583)	23.447	(596)
	360°	14.082	(358)	19.132	(486)	27.348	(695)	27.848	(707)
	Add per °	.0218	(1)	.0305	(1)	.0489	(1)	.0489	(1)

Dimensions for Air/Oil Tanks

Rotary Actuator Bore Size	Air/Oil Tank Model Number	Tank Bore Size	AA		B		C		D		K
1-1/8"	AOT-225X2	1-1/8"	1.500	(38)	3.125	(79)	2.750	(70)	.750	(19)	1/8" NPT
1-1/2"	AOT-225X3	1-1/8"	1.500	(38)	4.125	(105)	3.750	(95)	.750	(19)	1/8" NPT
2"	AOT-225X4	1-1/8"	1.500	(38)	5.125	(130)	4.750	(121)	.750	(19)	1/8" NPT
2-1/2"	AOT-225X5	1-1/8"	1.500	(38)	6.125	(156)	5.750	(146)	.750	(19)	1/8" NPT

Standard Air/Oil Tandem

Rotary unit is supplied with an Air/Oil Tank that requires a 20 PSI pressure header.
TO ORDER: enter option code 6 in Rack/Rotary Type position 2.

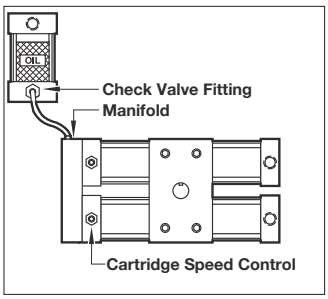

Cartridge Speed Control

ø1-1/2" thru ø2-1/2" Bores only.
NOTE: Cartridge Speed Control & Cushion are not available on same end cap.

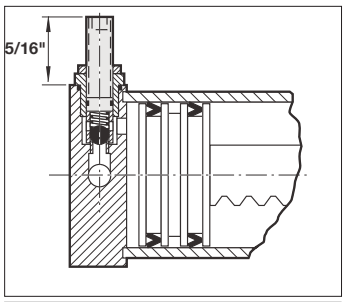

Noise Dampening Bumper

Urethane bumpers attached to the actuator piston provides quiet operation by preventing metal to metal contact.
NOTE: Each bumper adds 1/4" to A dimension.

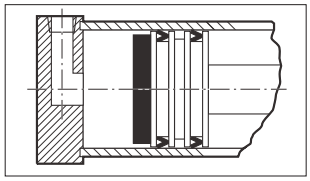

Rotation Adjustment

Located in the actuator end cap, each rotation adjustment provides up to 30° of angle reduction.
NOTE: Cushion & Rotation Adjustment are not available on the same end cap.

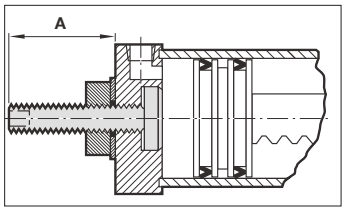

Bore	1-1/8"	1-1/2"	2"	2-1/2"
A	.687 (17.46)	.938 (23.81)	1.187 (30.16)	1.187 (30.16)

Cushioning

The Cushioning Principle
Cushions permit the trapping of cylinder exhaust volume prior to the completion of full rotation. This volume is then metered through a finely tapered needle to deliver smooth, adjustable deceleration of the rotary actuator.
NOTE: On 1-1/8" bores, add 1/2" to overall dimension for each cushion block.

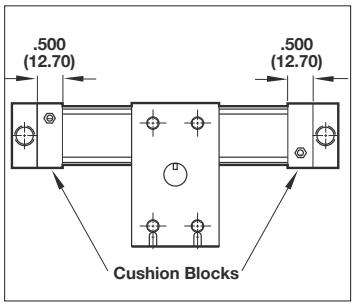

Cushion Design 1-1/8" Bore

Adjustable Cushioning

Flush, self locking adjustment needle allows fine cushion metering. Cushion design features a unique, one piece, nitrile compound seal captured within a groove machined to exacting tolerances. This allows linear and radial float of the cushion seal, virtually eliminating problems associated with misalignment.

The design also provides exceptionally fast out of cushion rotation reversal.

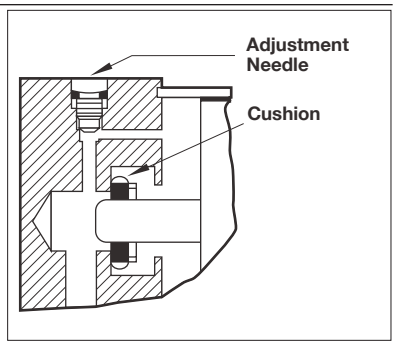

Cushion Design 1-1/2" or 2-1/2" Bore

Displacement • Load Bearing Capacity • Unit Weights

Bore Size	Displacement for Each Degree of Rotation Inch^3	(mm^3)	Axial Load Bearing Capacity lbs	(Kg)	Radial Load Bearing Capacity lbs	(Kg)	Distance Between Bearings Inch	(mm)	Unit Weight 90° lbs	(Kg)	Unit Weight 180° lbs	(Kg)	Unit Weight 360° lbs	(Kg)	Add for Double Output Shaft lbs	(Kg)
1-1/8" Single Rack	.0108	(177)	100	(45)	200	(91)	1.38	(35)	3.5	(1.59)	3.75	(1.70)	4.25	(1.93)	.063	(.03)
1-1/8" Double Rack	.0216	(354)	100	(45)	200	(91)	1.38	(35)	6	(2.72)	7	(3.18)	8.5	(3.86)	.063	(.03)
1-1/2" Single Rack	.0270	(443)	225	(102)	450	(204)	1.56	(40)	6.75	(3.06)	7.5	(3.41)	9	(4.09)	.344	(.16)
1-1/2" Double Rack	.0540	(885)	225	(102)	450	(204)	1.56	(40)	10.5	(4.77)	12.75	(5.79)	17.25	(7.83)	.344	(.16)
2" Single Rack	.0760	(1254)	500	(227)	1000	(454)	2.28	(58)	18	(8.17)	19.5	(8.85)	21	(9.53)	.656	(.30)
2" Double Rack	.1520	(2491)	500	(227)	1000	(454)	2.28	(58)	22	(9.98)	24	(10.90)	27	(12.26)	.656	(.30)
2-1/2" Single Rack	.1200	(1966)	500	(227)	1000	(454)	2.28	(58)	18.5	(8.40)	20	(9.08)	22	(9.99)	.656	(.30)
2-1/2" Double Rack	.2400	(3933)	500	(227)	1000	(454)	2.28	(58)	22.5	(10.22)	24.5	(11.12)	27.5	(12.49)	.656	(.30)

Theoretical Torque Output in Inch-pounds per PSI (Newton-meters per Bar)

	PSI (Bar)																		Inch-pounds per PSI	(Newton-meters per Bar)
Bore Size	40	(2.8)	60	(4.1)	80	(5.5)	90	(6.2)	100	(6.9)	125	(8.6)	150	(10.3)	200	(13.8)	250	(17.2)	400	(27.6)		
1-1/8" Single Rack	25	(2.8)	37	(4.2)	50	(5.6)	56	(6.3)	62	(7.0)	78	(8.8)	93	(17.5)	124	(10.5)	156	(17.6)	249	(28.1)	.6	(.59)
1-1/8" Double Rack	50	5.6)	75	(8.4)	100	(11.3)	112	(12.7)	124	(14.1)	155	(17.6)	187	(21.1)	249	(28.1)	311	(35.1)	498	(56.2)	1.2	(1.97)
1-1/2" Single Rack	62	(7.0)	93	(10.4)	124	(14.0)	139	(15.7)	155	(17.5)	194	(21.9)	232	(26.2)	310	(35.0)	387	(43.7)	620	(70.0)	.6	(2.62)
1-1/2" Double Rack	12	(14.0)	186	(21.0)	248	(28.0)	279	(31.5)	310	(35.0)	387	(43.8)	465	(52.5)	620	(70.0)	774	(87.5)	1239	(140.0)	3.2	(5.24)
2" Single Rack	175	(19.9)	264	(29.8)	352	(39.7)	396	(44.7)	440	(49.7)	550	(62.1)	660	(74.4)	879	(99.3)	1099	(124.1)	1758	(198.6)	4.4	(7.21)
2" Double Rack	352	(39.7)	528	(59.6)	703	(79.5)	791	(89.4)	879	(99.3)	1099	(124.1)	1319	(149.0)	1758	(198.6)	2198	(248.3)	3517	(397.2)	8.8	(14.41)
2-1/2" Single Rack	275	(31.0)	412	(46.6)	550	(62.1)	619	(69.9)	687	(77.7)	860	(97.1)	1031	(116.5)	1375	(155.3)	1719	(194.1)	2750	(310.6)	6.9	(11.30)
2-1/2" Double Rack	550	(62.1)	825	(93.2)	1100	(124.2)	1237	(139.8)	1375	(155.3)	1719	(194.1)	2062	(232.9)	2750	(310.6)	3437	(388.2)	5500	(621.2)	13.8	(22.60)

NOTE: Air/Oil Tandem and Multiple Position Rotary Actuators utilize a double rack configuration; however, the torque output of a Single Rack unit apply. Deduct 10% from torque output for frictional loss. Deduct 20% for frictional loss on all Air/Oil Tandem Rotary Actuators.

NORGREN
ENGINEERING ADVANTAGE

NORGREN
ENGINEERING ADVANTAGE
CUSTOM SOLUTIONS

CASE STUDY Compact valve module frees valuable under-dash space in truck cabs

CUSTOMER CHALLENGE
- Reduce tubing & leak potential
- Simplify installation
- Easily adapt to various chassis configurations

CUSTOM SOLUTION BENEFITS
- Shortened tubing eliminates under-dash leaks
- Pre-configured electrical connector & push-in fittings enable fast installation
- Modular design enables accessory options

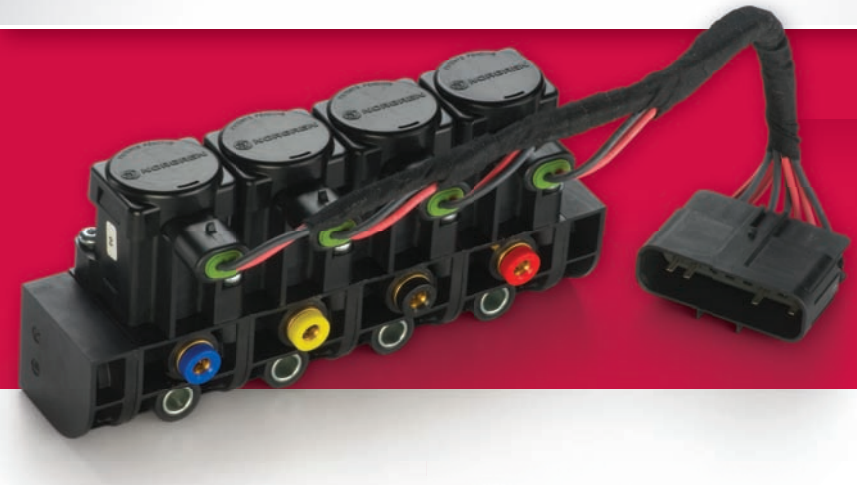

Air Solenoid Accessory Pack (ASAP)

NORGREN INDUSTRY EXPERTS CAN
» Increase system performance
» Reduce total cost of ownership

www.EngineeringAdvantage.com

Find solutions across **ALL INDUSTRIES** | 1.800.611.9156

NORGREN
ENGINEERING ADVANTAGE

OVER 85 YEARS OF Motion & Fluid Control Innovation

NORGREN ENGINEERING ADVANTAGE

ISO/VDMA Cylinders

DA/8000

Double acting

Ø 32 ... 320 mm

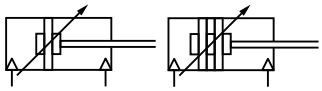

Conforms to ISO 6431, ISO 15552, VDMA 24562 and NFE 49-003-1

High performance, ruggedness and reliability

Extensive range of mountings

Technical data

Medium:

Compressed air, filtered, lubricated or non-lubricated

Standard:

ISO 6431, VDMA 24562, NFE 49-003-1 and corresponding BS

Operation:

DA/8000 double acting, adjustable cushioning

DA/8000/M double acting, magnetic piston, adjustable cushioning

Operating pressure:

15 to 232 psig (1 to 16 bar) 15 to 145 psig [1 to 10 bar] for Ø 250 and 320 mm

Operating temperature:

-4°F to +176°F (-20°C to +80°C) max.

Consult our Technical Service for use below +35°F (+2°C)

Strokes:

Standard, see table

Non-standard strokes up to 3000 mm maximum

Materials

Barrel: anodized aluminum

End covers: pressure diecast aluminium (Ø 200 to 320 mm gravity cast aluminum)

Piston rod: stainless steel (Martensitic)

Piston rod seals: polyurethane (Ø 125 to 320 mm nitrile rubber)

Piston seals: polyurethane (Ø 125 to 320 mm nitrile rubber)

'O'-rings: nitrile rubber

Standard models

Ø	Piston rod Ø	ISO Port size	Model non-magnetic	Model magnetic	NPT Port size	Model non-magnetic	Model magnetic	Service kit
32	12	G1/8	DA/8032/*	DA/8032/M/*	1/8"	DC/8032/*	DC/8032/M/*	**QA/8032/00**
40	16	G1/4	DA/8040/*	DA/8040/M/*	1/4"	DC/8040/*	DC/8040/M/*	**QA/8040/00**
50	20	G1/4	DA/8050/*	DA/8050/M/*	1/4"	DC/8050/*	DC/8050/M/*	**QA/8050/00**
63	20	G3/8	DA/8063/*	DA/8063/M/*	3/8"	DC/8063/*	DC/8063/M/*	**QA/8063/00**
80	25	G3/8	DA/8080/*	DA/8080/M/*	3/8"	DC/8080/*	DC/8080/M/*	**QA/8080/00**
100	25	G1/2	DA/8100/*	DA/8100/M/*	1/2"	DC/8100/*	DC/8100/M/*	**QA/8100/00**
125	32	G1/2	DA/8125/*	DA/8125/M/*	1/2"	DC/8125/*	DC/8125/M/*	**QA/8125/00**
160	40	G3/4	DA/8160/*	DA/8160/M/*	3/4"	DC/8160/*	DC/8160/M/*	**QA/8160/00**
200	40	G3/4	DA/8200/*	DA/8200/M/*	3/4"	DC/8200/*	DC/8200/M/*	**QA/8200/00**
250	50	G1	DA/8250/*	DA/8250/M/*	1"	DC/8250/*	DC/8250/M/*	**QA/8250/00**
320	63	G1	DA/8320/*	DA/8320/M/*	1"	DC/8320/*	DC/8320/M/*	**QA/8320/00**

* Insert stroke length in mm.

Options selector

★DC/8050/M★/★★★★

Special variants	Substitute
Ecology seals	B
Heat resistant seals, 150°C max.	T

Piston rod material	Substitute
Chrome plated stainless steel	D
Non-Chrome plated (for N1 and N2 options only)	R

Threads	Substitute
Metric ports: ISO 228 (G 1/8 to G 1)	A
NPT ports***	C

Series	Substitute
8000	8

Cylinder diameters (mm)	Substitute
032, 040, 050, 063, 080, 100, 125, 160, 200, 250, 320	

Variants (magnetic piston)	Substitute
Standard	M
Special wiper/seal	W2
Low friction	X2
Piston rod bellow	MG
Without cushioning	MW
Without cushioning, low friction	X4
Double ended piston rod	JM
Double ended piston rod, special wiper/seal	W4
Four position	MT
Non-rotating piston rod	N2*
Locking unit	L4
Extended piston rod	MU
Extended piston rod, special wiper/seal	W6

A/8000/MU//***/***
/W6/ → Extension (mm)

Strokes (mm)
3000 max.

Variants (non-magnetic piston)	Substitute
Standard	None
Special wiper/seal	W1
Low friction	X1
Piston rod bellow	G
Without cushioning	W
Without cushioning, low friction	X3
Double ended piston rod	J
Double ended piston rod, special wiper/seal	W3
Four position	IT
Non-rotating piston rod	N1*
Locking unit	L2
Extended piston rod	IU
Extended piston rod, special wiper/seal	W5

A/8000/IU//***/***
/W5/ → Extension (mm)

Note: If option is not required, disregard option position within part number eg. RA/8100/100
For combinations of cylinder variants consult our Technical Service.

* N1 and N2 option built using non chrome plate, stainless steel piston rods

*** Consult factory for NPT ports on bore sizes: 125, 160, 200, 250, 320

Norgren.com/usa – 303.794.2611 – help@amer.norgren.com

ISO/VDMA Cylinders

DA/8000

Double acting

Ø 32 ... 320 mm

Dimensions in mm

Standard cylinders

DA/8000, DA/8000/M

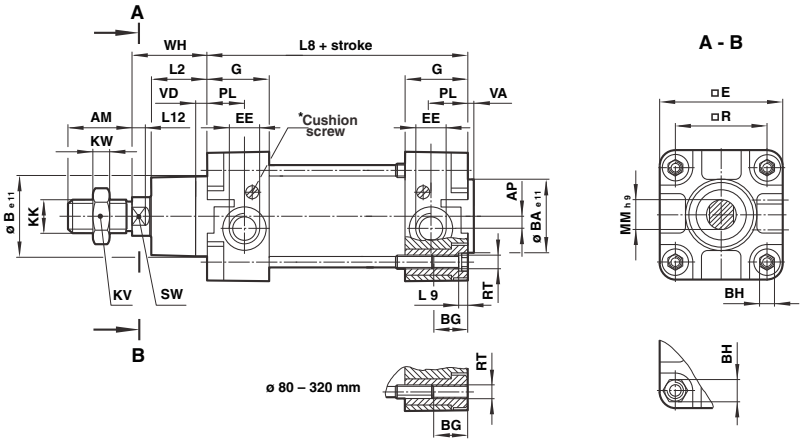

Ø	AM	AP	Ø B e11	Ø BA e11	BG	BH (A/F)	❑ E	EE	G	KK	KV (A/F)	KW	L2
32	22	3.5	30	30	18	6	47	G 1/8	27.5	M10x1.25	17	5	20
40	24	4.5	35	35	18	6	53	G 1/4	32	M12x1.25	19	6	22
50	32	6	40	40	18	8	65	G 1/4	31	M16x1.5	24	8	27
63	32	10	45	45	17.5	8	75	G 3/8	33	M16x1.5	24	8	29
80	40	8.5	45	45	21.5	19	95	G 3/8	33	M20x1.5	30	10	33
100	40	9	55	55	21.5	19	115	G 1/2	37	M20x1.5	30	10	36
125	54	10	60	60	30	24	140	G 1/2	46	M27x2	41	13.5	45
160	72	18	65	65	28.5	32	183.5	G 3/4	50	M36x2	55	18	58
200	72	18	75	75	28.5	32	224	G 3/4	50	M36x2	55	18	67
250	84	22.5	90	90	35	36	280	G 1	58	M42x2	65	21	80
320	96	22.5	110	110	30	46	350	G 1	60	M48x2	75	24	90

Ø	L8	L9	L12	Ø MM h9	PL	❑ R	RT	SW (A/F)	VA	VD	WH	Cylinder weight lbs. at 0 mm	lbs/25 mm
32	94	4	6	12	13	32.5	M 6	10	3	6	26	1.12 lb	0.13 lb
40	105	4	6.5	16	15	38	M 6	13	3.5	6	30	1.76 lb	0.18 lb
50	106	5	8	20	18.5	46.5	M 8	17	3.5	6	37	2.93 lb	0.26 lb
63	121	5	8	20	19	56.5	M 8	17	4	6	37	3.97 lb	0.29 lb
80	128	-	10	25	19	72	M 10	22	4	6	46	7.17 lb	0.44 lb
100	138	-	10	25	18	89	M 10	22	4	6	51	10.6 lb	0.51 lb
125	160	-	13	32	22.5	110	M 12	27	6	15.5	65	17.6 lb	0.73 lb
160	180	-	16	40	21	140	M 16	36	4	15	80	32.9 lb	1.21 lb
200	180	-	16	40	21	175	M 16	36	5	15	95	47.8 lb	1.32 lb
250	200	-	20	50	29	220	M 20	41	7	13	105	71.9 lb	2.03 lb
320	220	-	24	63	30	270	M 24	55	7	13	120	131.9 lb	3.22 lb

Cylinder variants

DA/8000/J, DA/8000/JM – Cylinders with double ended piston rod

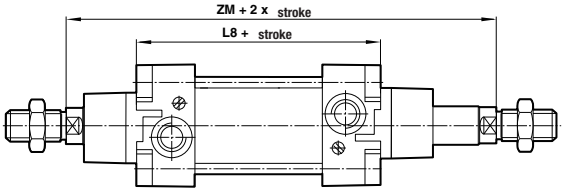

Ø	ZM	L8
32	146	94
40	165	105
50	180	106
63	195	121
80	220	128
100	240	138
125	290	160
160	340	180
200	370	180

RA/8000/N1, RA/8000/N2 – Cylinders with non-rotating piston rod

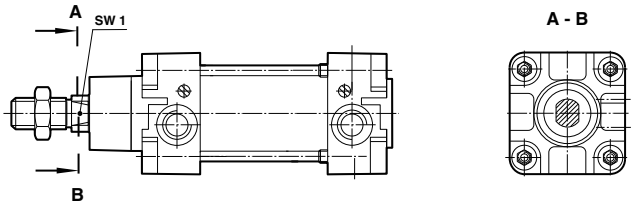

Ø	SW1 (A/F)
32	10
40	13
50	16
63	16
80	21
100	21

ISO/VDMA Cylinders

DA/8000

Double acting

Ø 32 ... 320 mm

DA/8000/IT, DA/8000/MT – Four position cylinders

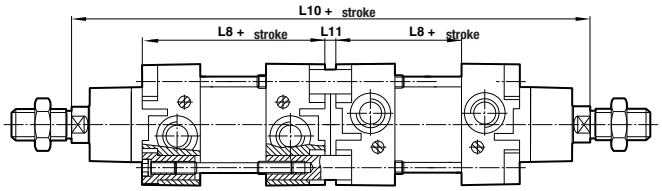

Ø	L 8	L 10	L 11
32	94	247	7
40	105	278	8
50	106	294	8
63	121	325	9
80	128	357	9
100	138	387	9
125	160	462	12
160	180	530	10
200	180	560	10

DA/8000/G, DA/8000/MG – Cylinders with piston rod gaiter

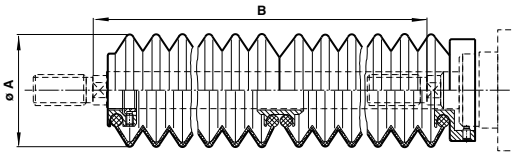

Ø	Ø A	Maximum stroke per gaiter	Piston rod extension B First gaiter	Further gaiter
32	40	60	30	25
40	63	145	50	32
50	63	145	40	32
63	63	145	40	32
80	80	250	50	45
100	80	250	50	45
125	80	250	50	45
160	116	350	70	60
200	116	350	70	60
250	116	350	70	60
320	143	500	110	100

ISO/VDMA Cylinders

DA/8000

Double acting

Ø 32 ... 320 mm

Dimensions in mm

Mountings

Ø	A	AK	B, G	C	D	D2	F	FH	H
				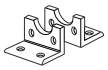					
32	QM/8032/35	QM/8025/38	QA/8032/22	QA/8032/21	QA/8032/23	QA/8032/42	QM/8025/25	QA/8032/34	QM/8032/28
40	QM/8032/35	QM/8040/38	QA/8040/22	QA/8040/21	QA/8040/23	QA/8040/42	QM/8040/25	QA/8040/34	QM/8040/28
50	QM/8050/35	QM/8050/38	QA/8050/22	QA/8050/21	QA/8050/23	QA/8050/42	QM/8050/25	QA/8050/34	QM/8050/28
63	QM/8050/35	QM/8050/38	QA/8063/22	QA/8063/21	QA/8063/23	QA/8063/42	QM/8050/25	QA/8063/34	QM/8063/28
80	QM/8080/35	QM/8080/38	QA/8080/22	QA/8080/21	QA/8080/23	QA/8080/42	QM/8080/25	QA/8080/34	QM/8080/28
100	QM/8080/35	QM/8080/38	QA/8100/22	QA/8100/21	QA/8100/23	QA/8100/42	QM/8080/25	QA/8100/34	QM/8100/28
125	QM/8125/35	QM/8125/38	QM/8125/22	QM/8125/21	QM/8125/23	QA/8125/42	QM/8125/25	QA/8125/34	QM/8125/28
160	QM/8160/35	QM/8160/38	QM/8160/22	QM/8160/21	QM/8160/23	QA/8160/42	QM/8160/25	–	QM/8160/28
200	QM/8160/35	QM/8160/38	QM/8200/22	QM/8200/21	QM/8200/23	QA/8200/42	QM/8160/25	–	QM/8200/28
250	QM/8250/35	–	QM/8250/22	QM/8250/21	QM/8250/23	–	QM/8250/25	–	QM/8250/28
320	QM/8320/35	–	QM/8320/22	QM/8320/21	QM/8320/23	–	QM/8320/25	–	QM/8320/28

Ø	L	M	R	S	SS	SW	UF	UH	UL
	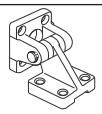	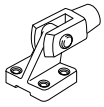							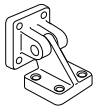
32	QA/8032/24	QM/8032/26	QA/8032/27	QA/8032/41	M/P19931	M/P19493	QM/8025/32	QA/8032/40	QA/8032/43
40	QA/8040/24	QM/8040/26	QA/8040/27	QA/8040/41	M/P19932	M/P19494	QM/8040/32	QA/8040/40	QA/8040/43
50	QA/8050/24	QM/8050/26	QA/8050/27	QA/8040/41	M/P19933	M/P19495	QM/8050/32	QA/8050/40	QA/8050/43
63	QA/8063/24	QM/8063/26	QA/8063/27	QA/8063/41	M/P19934	M/P19496	QM/8050/32	QA/8063/40	QA/8063/43
80	QA/8080/24	QM/8080/26	QA/8080/27	QA/8063/41	M/P19935	M/P19497	QM/8080/32	QA/8080/40	QA/8080/43
100	QA/8100/24	QM/8100/26	QA/8100/27	QA/8100/41	M/P19936	M/P19498	QM/8080/32	QA/8100/40	QA/8100/43
125	QM/8125/24	QM/8125/26	QM/8125/27	QA/8100/41	M/P19937	M/P19499	QM/8125/32	QA/8125/40	QA/8125/43
160	QM/8160/24	QM/8160/26	QM/8160/27	QM/8160/41	M/P19938	M/P19679	QM/8160/32	QA/8160/40	QM/8160/43
200	QM/8200/24	QM/8200/26	QM/8200/27	QM/8160/41	M/P19939	M/P19683	QM/8160/32	QA/8200/40	QM/8200/43
250	QM/8250/24	–	–	–	–	M/P19446	QM/8250/32	–	–
320	QM/8320/24	–	–	–	–	M/P19447	QM/8320/32	–	–

Ø	UR	US	Guide blocks	Guide blocks	Locking unit (passive)
			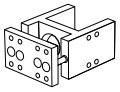	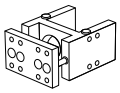	
32	QA/8032/33	M/P40310	QA/8032/51/*	QA/8032/61/*	QA/8032/59
40	QA/8040/33	M/P40311	QA/8040/51/*	QA/8040/61/*	QA/8040/59
50	QA/8050/33	M/P40312	QA/8050/51/*	QA/8050/61/*	QA/8050/59
63	QA/8063/33	M/P40313	QA/8063/51/*	QA/8063/61/*	QA/8063/59
80	QA/8080/33	M/P40314	QA/8080/51/*	QA/8080/61/*	QA/8080/59
100	QA/8100/33	M/P40315	QA/8100/51/*	QA/8100/61/*	QA/8100/59
125	QM/8125/33	M/P71355	–	–	QA/8125/59
160	QM/8160/33	M/P71356	–	–	–
200	QM/8200/33	M/P71357	–	–	–

NORGREN ENGINEERING ADVANTAGE

ISO/VDMA Cylinder mountings

For DA/8000; RA/191000; RA/192000; RA/193000

Dimensions in mm

Front or rear stud – A
ISO 6431
QM/8***/35

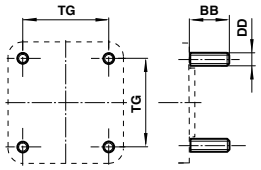

Ø	BB	DD	TG	lb
32	17	M6	32.5	0.04
40	17	M6	38	0.04
50	23	M8	46.5	0.11
63	23	M8	56.5	0.11
80	28	M10	72	0.18
100	28	M10	89	0.18
125	34	M12	110	0.31
160	42	M16	140	0.68
200	42	M16	175	0.68
250	50	M20	220	2.03
320	60	M24	270	3.22

Piston rod swivel – AK
QM/8***/38

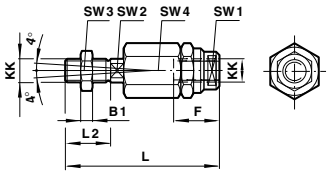

Ø	Thread KK	B1	F	L	L2	SW1	SW2	SW3	SW4	lb
32	M10x1.25	5	26	73	20	19	12	17	30	0.44
40	M12x1.25	6	26	77	24	19	12	19	30	0.44
50-63	M16x1.5	8	34	106	32	30	19	24	42	1.43
80-100	M20x1.5	10	42	122	40	30	19	30	42	1.59
125	M27x2	13.5	40	147	54	40	24	41	55	3.75
100-200	M36x2	18	78	251	72	50	36	55	75	11.91

Rear flange – B
Front flange – G
ISO 6431 and
VDMA 24562 Part 2
QA/8***/22
QM/8***/22

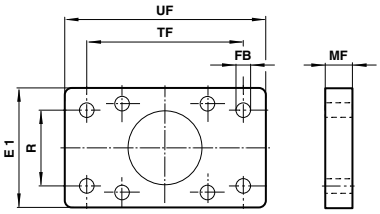

Ø	E1	Ø FB	MF	R	TF	UF	lb
20	36	6.6	10	0	55	70	0.35
25	40	6.6	10	0	60	76	0.44
32	50	7	10	32	64	80	0.55
40	55	9	10	36	72	90	0.77
50	65	9	12	45	90	110	1.54
63	75	9	12	50	100	125	1.76
80	100	12	16	63	126	154	2.98
100	120	14	16	75	150	186	4.85
125	140	16	20	90	180	224	3.75
160	180	18	20	115	230	280	6.84
200	220	22	25	135	270	320	10.14
250	280	26	25	165	330	395	16.32
320	350	33	30	200	400	475	29.0

Foot – C
ISO 6431 and
VDMA 24562 Part 2
QA/8***/21
QM/8***/21

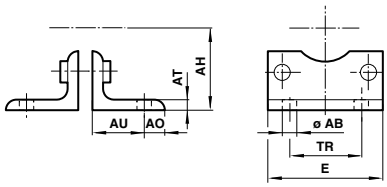

Ø	Ø AB	AH	AO	AT	AU	E	TR	lb
20	6.6	27	6	4	16	36	22	0.07
25	6.6	30	7	4	16	40	26	0.09
32	7	32	8 (11)	4	24	48	32	0.33
40	9	36	9 (12)	4 (5)	28	53	36	0.40
50	9	45	10 (13)	5	32	64	45	0.66
63	9	50	12 (13)	5	32	74	50	0.86
80	12	63	19	5 (6)	41	98	63	1.76
100	14	71	19	5 (6)	41	115	75	2.09
125	16	90	20 (25)	9 (7)	45	140	90	5.30
160	18	115	20	8	60	180	115	7.72
200	22	135	30	9	70	220	135	11.58
250	26	165	35	10	75	280	165	20.94
320	33	200	45	16	85	350	200	48.51

( ) stainless steel, weight on request

Rear clevis – D
ISO 6431 and
VDMA 24562 Part 2
QA/8***/23
QM/8***/23

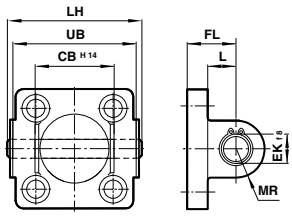

Ø	CB H14	Ø EK f8	FL	L	LH	MR	UB	lb
32	26	10	22	13	52	9	45	0.24
40	28	12	25	16	60	12	52	0.35
50	32	12	27	17	68	12	60	0.49
63	40	16	32	22	79	15	70	0.75
80	50	16	36	22	99	15	90	1.19
100	60	20	41	27	119	20	110	1.98
125	70	25	50	31	139 (40)	25	130	5.95
160	90	30	55	35.5	181	30	170	9.48
200	90	30	60	36	181	30	170	13.45
250	110	40	70	45	218	40	200	4.19
320	120	45	80	50	238	45	220	67.25

( ) Stainless steel, weight on request

Rear clevis – D2
VDMA 24562 Part 2
QA/8***/42

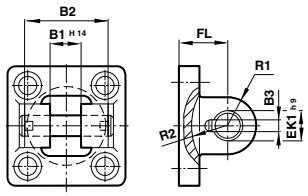

Ø	B1 H14	B2	B3	Ø EK h9	FL	R1	R2	lb
32	14	34	3.3	10	22	11	17	0.44
40	16	40	4.3	12	25	12	20	0.51
50	21	45	4.3	16	27	14.5	22	0.79
63	21	51	4.3	16	32	18	25	1.21
80	25	65	4.3	20	36	22	30	1.98
100	25	75	6.3	20	41	22	32	3.20
125	37	97	6.3	30	50	30	42	5.95
160	43	122	6.3	35	55	36	46	9.48
200	43	122	6.3	35	60	38	49	13.45

Norgren.com/usa – 303.794.2611 – help@amer.norgren.com

ISO/VDMA Cylinder mountings

For DA/8000; RA/191000; RA/192000; RA/193000

Dimensions in mm

Piston rod clevis – F
QM/8***/25

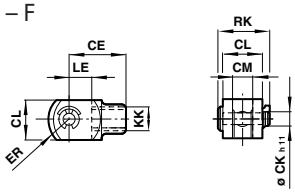

Ø	Thread KK	CE	Ø CK h11	CL	CM	ER	LE	RK	lb
32	M10x1.25	40	10	20	10	16	20	28	0.20
40	M12x1.25	48	12	24	12	19	24	32	0.29
50-63	M16x1.5	64	16	32	16	25	32	41.5	0.73
80-100	M20x1.5	80	20	40	20	32	40	50	1.48
125	M27x2	110	30	55	30	45	54	62	2.98
100-200	M36x2	144	35	70	35	57	72	95	6.62
250	M42x2	168	40	85	40	68	84	106	14.11
320	M48x2	192	50	96	50	85	96	121	19.18

Front or rear detachable trunnion – FH
QA/8***/34

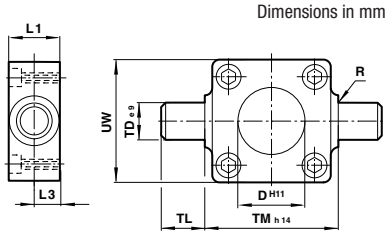

Ø	Ø D H11	L1	L3	R	ØTD e9	TL	TM h14	UW1	lb
32	30	16	8	1	12	12	50	50	0.44
40	35	20	10	1.6	16	16	63	55	0.84
50	40	24	12	1.6	16	16	75	65	1.32
63	45	24	12	1.6	20	20	90	75	2.43
80	45	28	14	1.6	20	20	110	100	4.19
100	55	38	19	2	25	25	132	120	7.72
125	60	50	25	2	25	25	160	145	14.33

Front hinge – M
QM/8***/26

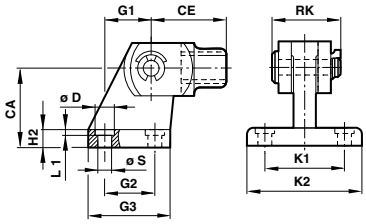

Ø	Thread KK	Ø	CA	CE	Ø D	G1	G2	G3	H2	K1	K2	L1	RK	Ø S	lb
32	M10x1.25	32	32	40	11	21	18	31	8	38	51	1.6	28	6.6	0.53
40	M12x1.25	40	36	48	11	24	22	35	10	41	54	1.6	32	6.6	0.73
50	M16x1.5	50	45	64	15	33	30	45	12	50	65	1.6	41.5	9	1.79
63	M16x1.5	63	50	64	15	37	35	50	12	52	67	1.6	41.5	9	1.83
80	M20x1.5	80	63	80	18	47	40	60	14	66	86	2.5	50	11	3.13
100	M20x1.5	100	71	80	18	55	50	70	15	76	96	2.5	50	11	4.12
125	M27x2	125	90	110	20	70	60	90	20	94	124	3.2	62	14	8.49
160	M36x2	160	115	144	20	97	88	126	25	118	156	4	95	14	19.85
200	M36x2	200	135	144	24	105	90	130	30	122	162	4	95	16	23.37

Rear eye – R
ISO 6431 and VDMA 24562 Part 2
QA/8***/27
QM/8***/27

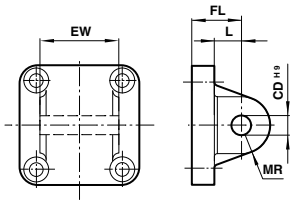

Ø	Ø CD H9	EW	FL	L	MR	lb
20	8	15.8	20	14	8	0.04
25	8	15.8	20	14	8	0.07
32	10	25.8	22	13	9	0.20
40	12	27.8	25	16	12	0.24
50	12	31.7	27	17	12	0.37
63	16	39.7	32	22	15	0.53
80	16	49.7	36	22	15	0.82
100	20	59.7	41	27	20	1.30
125	25	69.7	50	33	25	7.06
160	30	89.7	55	35.5	30	13.45
200	30	89.7	60	37	30	14.99

Rear hinge – L
QA/8***/24
QM/8***/24

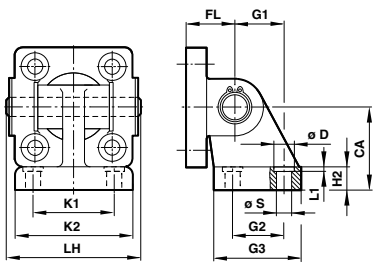

Rear hinge – UL
VDMA 24562 Part 2
QA/8***/43
QM/8***/43

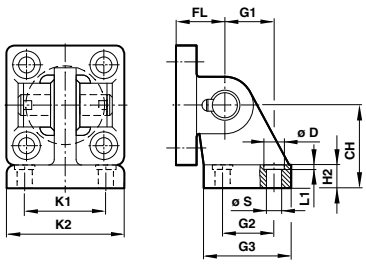

Ø	CA	CH	Ø D	FL	G1	G2	G3	H2	K1	K2	L1	LH	Ø S	L–lb	UL–lb
32	32	32	11	22	21	18	31	8	38	51	1.6	52	6.6	0.35	5.27
40	36	36	11	25	24	22	35	10	41	54	1.6	60	6.6	0.51	1.04
50	45	45	15	27	33	30	45	12	50	65	1.6	68	9	0.79	1.81
63	50	50	15	32	37	35	50	12	52	67	1.6	79	9	1.15	2.51
80	63	63	18	36	47	40	60	14	66	86	2.5	99	11	1.81	4.26
100	71	71	18	41	55	50	70	15	76	96	2.5	119	11	2.91	6.28
125	90	90	20	50	70	60	90	20	94	124	3.2	139	14	11.91	12.79
160	115	115	20	55	97	88	126	25	118	156	4	181	14	23.37	23.59
200	135	135	24	60	105	90	130	30	122	162	4	181	18	31.09	33.52
250*	165	–	33	70	128	110	160	35	150	200	2	218	22	71.44	–
320*	200	–	40	80	150	122	186	40	170	234	2	238	26	115.76	–

* Stainless steel, weight on request

NORGREN ENGINEERING ADVANTAGE

ISO/VDMA Cylinder mountings

For DA/8000; RA/191000; RA/192000; RA/193000

Dimensions in mm

Trunnion support – S
VDMA 24562
Part 2
QA/8***/41
QM/8***/41

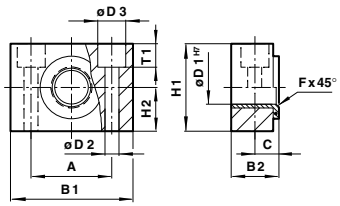

Ø	A	B1	B2	C	ØH7	ØD2	ØD3	fx45°	H1	H2	T1	lb
32	32	46	18	10.5	12	6.6	11	1	30	15	6.8	0.22
40	36	55	21	12	16	9	15	1.6	36	18	9	0.31
50	36	55	21	12	16	9	15	1.6	36	18	9	0.31
63	42	65	23	13	20	11	18	1.6	40	20	11	0.42
80	42	65	23	13	20	11	18	1.6	40	20	11	0.42
100	50	75	28.5	16	25	14	20	2	50	25	13	0.75
125	50	75	28.5	16	25	14	20	2	50	25	13	0.75
160	60	92	39	21.5	32	18	26	2.5	60	25	15.5	4.19
200	60	92	39	21.5	32	18	26	2.5	60	25	15.5	4.19

Center trunnion – H (for tie rod types)
ISO 6431 and VDMA 24562 Part 2
QM/8***/28

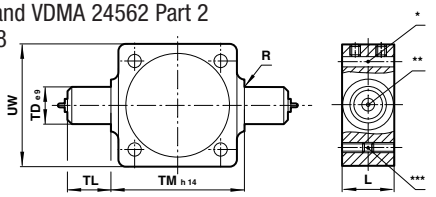

*Type – UH ***Type – H
**Grease nipple up to Ø 125 mm

Ø	L	R	ØTD e9	TL	TM h14	UW	XV min.	XV max.	lb	Torque in. lb.
32	20	1	12	12	50	50	66	80	0.35	53.1
40	24	1.6	16	16	63	58	76	89	0.77	53.1
50	28	1.6	16	16	75	70	82	98	0.77	53.1
63	28	1.6	20	20	90	80	88	107	1.87	88.5
80	28	1.6	20	20	110	100	97	123	1.87	88.5
100	38	2	25	25	132	126	112	128	5.07	132.75
125	50	2	25	25	160	152	136	154	7.28	221.25
160	50	2.5	32	32	200	192	155	185	11.69	354
200	50	2.5	32	32	250	240	170	200	20.73	354
250	60	3.2	40	40	320	318	193	217	39.69	–
320	70	3.2	50	50	400	400	215	245	66.15	–

Note: Style 'H': These mountings are only supplied assembled complete with the cylinder. Unless otherwise specified, units will be supplied with dimension 'XV' plus half the stroke length. 'XV' = Distance from the piston rod shoulder to the center of the mounting.

Style 'UH': It is most important that the locking screws which secure the mounting to the tie rod are tightened to the torque figures shown in the table below. For maximum energy input, consult our Technical Service.

Adjustable center trunnion – UH (for profile types)
QA/8***/40

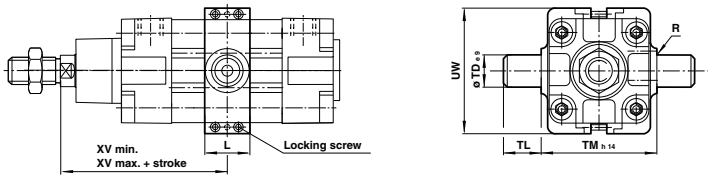

Ø	L	R	Ø TD e9	TL	TM h14	UW	lb	Torque in. lb.
32	25	1	12	12	50	58	0.77	17.70
40	28	1.6	16	16	63	65	1.10	30.98
50	28	1.6	16	16	75	80	1.76	30.98
63	36	1.6	20	20	90	96	3.09	44.25
80	36	1.6	20	20	110	116	4.19	53.10
100	48	2	25	25	132	140	5.07	53.10
125	50	2	25	25	160	163	7.28	53.10

Narrow hinge – SS

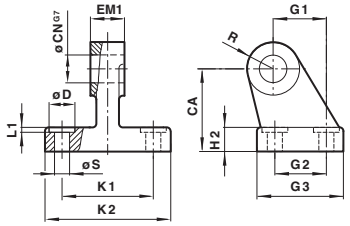

Wide hinge – SW

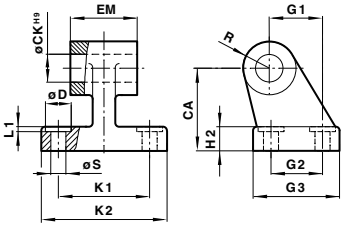

Swivel hinge – US

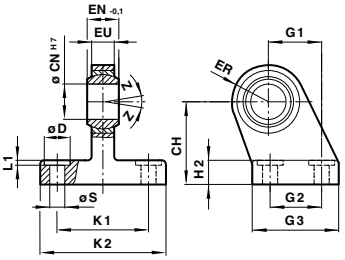

Ø	CA	CH CN H7	Ø CK H9	Ø D	H2	EM	EM1	EN-0.1	ER	EU	G1	G2	G3	H6	K1	K2	L1	R1	Ø S	Z	SW lb	SS lb	US lb
32	32	32	10	10	11	26	10	14	16	10.5	21	18	31	8	38	51	1.6	10	6.6	13°	0.11	0.33	0.42
40	36	36	12	12	11	28	12	16	18	12	24	22	35	10	41	54	1.6	11	6.6	13°	0.15	0.44	0.53
50	45	45	16	12	11	32	16	21	21	15	33	30	45	10	50	65	1.6	13	6.6	13°	0.31	1.06	1.01
63	50	50	16	16	15	40	16	21	23	15	37	35	50	12	52	67	1.6	15	9	15°	0.40	1.10	1.30
80	63	63	20	16	18	50	20	25	28	18	47	40	60	14	66	86	2.5	15	11	15°	0.62	1.65	2.27
100	71	7	20	20	18	60	20	25	30	18	55	50	70	15	76	96	2.5	19	11	15°	3.13	2.65	3.09
125	90	90	30	–	20	70	30	37	40	25	70	60	90	20	94	124	–	22	14	15°	5.95	5.51	6.84
160	115	115	35	30	20	90	35	43	44	28	97	88	126	25	118	156	4	31	14	15°	13.89	13.23	14.11
200	135	135	35	30	24	90	35	43	47	28	105	90	130	30	122	162	4	31	16	15°	17.64	16.76	20.07
250	165	–	–	40	33	110	–	–	–	–	128	110	160	35	150	200	2	40	22	–	29.55	–	–
320	200	–	–	45	40	120	–	–	–	–	150	122	186	40	170	234	2	45	26	–	48.51	–	–

ISO/VDMA Cylinder mountings

For DA/8000; RA/191000; RA/192000; RA/193000,.../M

Dimensions in mm

Universal piston rod eye – UF
DIN ISO 8139
QM/8***/32

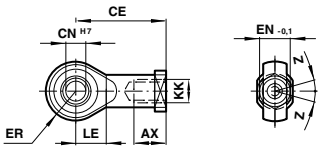

Thread KK	AX	CE	Ø CN H7	EN-0.1	ER	LE	Z	lb
M10x1.25	20	43	10	14	14	15	13°	0.20
M12x1.25	22	50	12	16	16	17	13°	0.29
M16x1.5	28	64	16	21	21	22	15°	0.73
M20x1.5	33	77	20	25	25	26	15°	1.48
M27x2	51	110	30	37	35	36	15°	2.98
M36x2	56	125	35	43	40	41	16°	6.62
M42x2	60	142	40	49	45	46	17°	14.11
M48x2	65	160	50	60	58	59	12°	19.18

Universal rear eye – UR
QA/8***/33
QM/8***/33

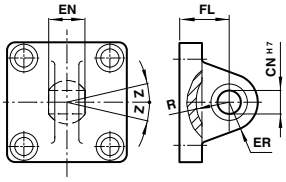

Ø	Ø CN H7	EN	ER	FL	R	Z	lb
32	10	14	16	22	14.5	13°	0.33
40	12	16	19	25	18	13°	0.55
50	16	21	21	27	19	13°	0.88
63	16	21	24	32	24	15°	1.21
80	20	25	28	36	24	15°	1.98
100	20	25	30	41	29	15°	3.31
125	30	37	40	50	36	15°	5.95
160	35	43	44	55	41	16°	10.14
200	35	43	48	60	42	16°	16.10

NORGREN ENGINEERING ADVANTAGE

Guide blocks for ISO/VDMA cylinders

QA/8000/51/*

QA/8000/61/*

Ø 32 ... 100mm

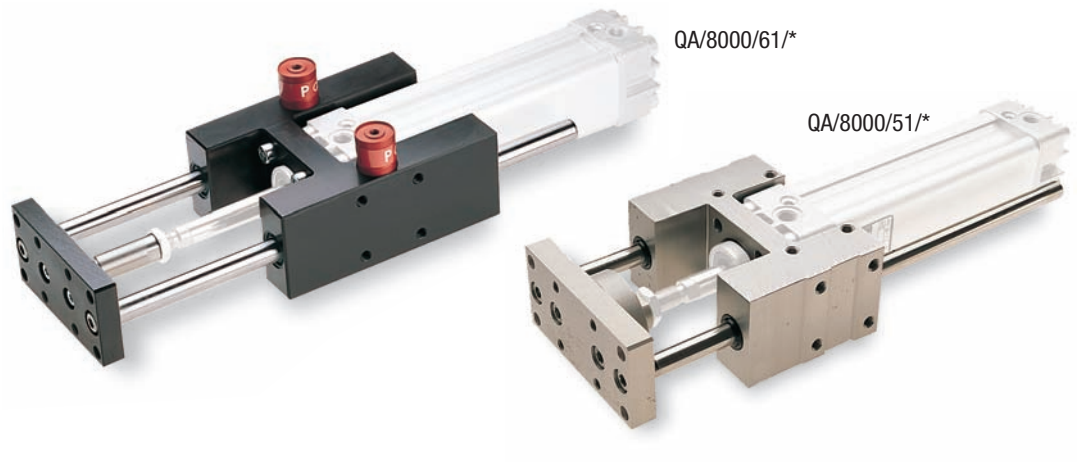

Conforms to ISO 6431, ISO 1552, VDMA 24562 and NFE 49 003 1

Ensures protection against external rotary and bending forces

Guide rods run through bearings protected by wiper rings

Provides accurate guidance for unsupported loads

Technical data

Operating temperature:

+32°F to +176°F (0°C to +80°C) maximum

Materials

Guide block, nut & mounting plate: anodized aluminum

Plain bearings:
Sintered bronze QA/8***/51/*
Steel roller bearing QA/8***/61/*

Rods: Stainless steel

Wiper rings: nitrile rubber

Standard models QA/8000/51/* (plain bearing)

Ø	Guide rod Ø	Model	Suitable for cylinders Magnetic	Non-magnetic
32	10	QA/8032/51/*	DA/8032/M, PDA/182032/M	DA/8032, PDA/182032
40	12	QA/8040/51/*	DA/8040/M, PDA/182040/M	DA/8040, PDA/182040
50	12	QA/8050/51/*	DA/8050/M, PDA/182050/M	DA/8050, PDA/182050
63	12	QA/8063/51/*	DA/8063/M, PDA/182063/M	DA/8063, PDA/182063
80	16	QA/8080/51/*	DA/8080/M, PDA/182080/M	DA/8080, PDA/182080
100	16	QA/8100/51/*	DA/8100/M, PDA/182100/M	DA/8100, PDA/182100

* Insert stroke length in mm.

Standard models QA/8000/61/* (roller bearing)

Ø	Guide rod Ø	Model	Passive locking cartridge	Locking force (N)	Suitable for cylinders Magnetic #	Non-magnetic #
32	12	QA/8032/61/*	QA/8032/63	600	DA/8032/M, PDA/182032/MIL #	DA/8032, PDA/182032/IIL #
40	16	QA/8040/61/*	QA/8040/63	1000	DA/8040/M, PDA/182040/MIL #	DA/8040, PDA/182040/IIL #
50	20	QA/8050/61/*	QA/8050/63	1500	DA/8050/M, PDA/182050/MIL #	DA/8050, PDA/182050/IIL #
63	20	QA/8063/61/*	QA/8050/63	1500	DA/8063/M, PDA/182063/MIL #	DA/8063, PDA/182063/IIL #
80	25	QA/8080/61/*	QA/8080/63	3000	DA/8080/M, PDA/182080/MIL #	DA/8080, PDA/182080/IIL #
100	25	QA/8100/61/*	QA/8080/63	3000	DA/8100/M, PDA/182100/MIL #	DA/8100, PDA/182100/IIL #

* Insert stroke length in mm.

Locking cartridges should be ordered separately. Active – pressure applied to lock, passive – pressure released to lock. 2 required per guide block.

Note: For all applications please consult our Technical Service

When using guide blocks (QA/8000/61) for profile cylinders PDA/182000 you have to order a model with a barrel which is turned at 90° so that the port threads are in line with the two switch grooves.

Guide blocks with plain bearings

QA/8000/51/*

Ø 32 ... 100 mm

Dimensions in mm

QA/8000/51/* – Guide blocks (plain bearing)

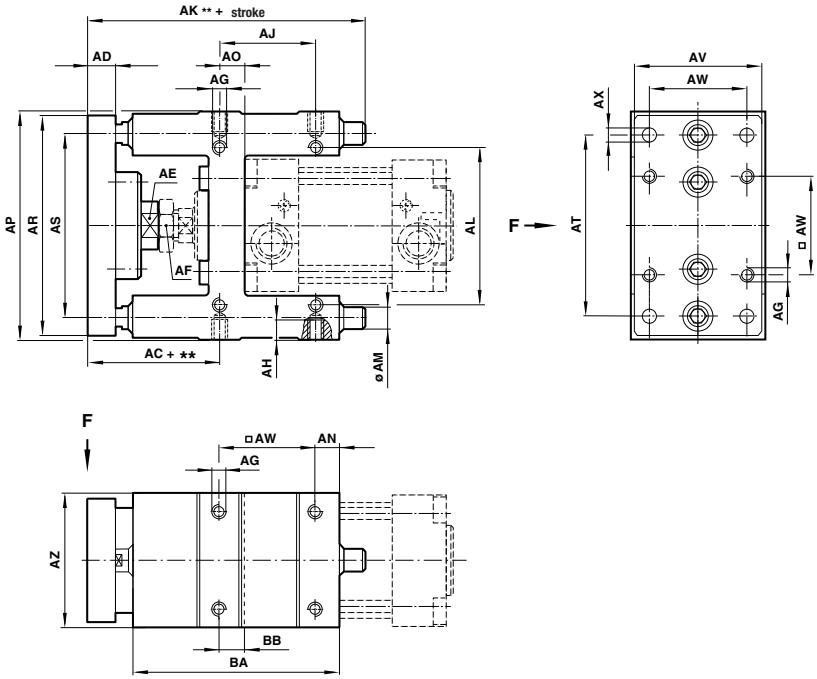

** Adjustment range

Ø	AC + **	AD	AE (A/F)	AF (A/F)	AG	AH	AJ	AK**	AL	Ø AM	AN	AO
32	69 + 2	12	15	17	M 6	10	32.5	110	58	10	6	9
40	74 + 2	12	15	19	M 6	10	38	122	64	12	6	11
50	91.5 + 4	15	22	24	M 8	12	46.5	135	80	12	6	19
63	92 + 4	15	22	24	M 8	12	56.5	153	95	12	7	15
80	106 + 6	15	27	30	M 10	15	50	180	130	16	9	14
100	111 + 6	15	27	30	M 10	15	70	199	150	16	9	19
Ø	**AP**	**AR**	**AS**	**AT**	**AV**	**❑ AW**	**Ø AX**	**AZ**	**BA**	**BB**	**at 0 mm**	**per 100**
32	100	90	74	78	45	32.5	6.6	48	76	9	2.20 lb	0.13 lb
40	106	100	80	84	50	38	6.6	56	85	11	2.65 lb	0.20 lb
50	125	120	96	100	60	46.5	9	66	99	19	3.97 lb	0.20 lb
63	132	125	104	105	70	56.5	9	76	114	15	4.90 lb	0.20 lb
80	165	155	130	130	90	72	11	98	134.5	25	9.04 lb	0.35 lb
100	185	175	150	150	110	89	11	118	153.5	28.5	12.80 lb	0.35 lb

** Adjustment ranges

Note: Supplied complete with mounting screws for cylinder.

Load capacity

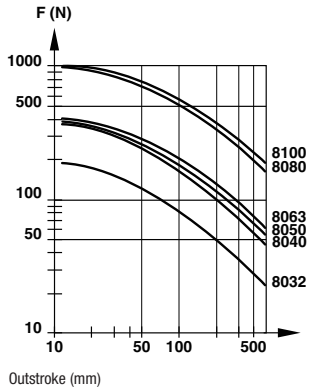

NORGREN
ENGINEERING ADVANTAGE

Guide blocks with roller bearings

QA/8000/61/*

Ø 32 ... 100 mm

Dimensions in mm

QA/8000/61/* – Guide blocks (roller bearing)

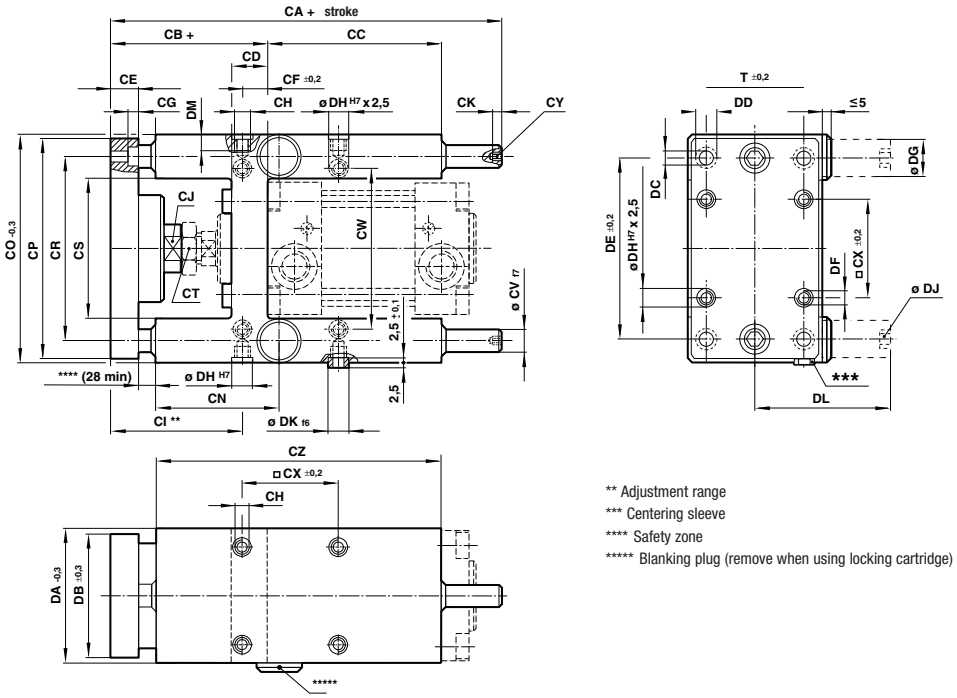

** Adjustment range
*** Centering sleeve
**** Safety zone
***** Blanking plug (remove when using locking cartridge)

Ø	CA**	CB + **	CC	CD	CE	CF ±0.2	CG	CH	CI**	CJ (A/F)	CK	CN	
32	177	100 + 5	65	28	12	15.3	6.5	M 6	84.5	13	5	61	
40	192	111 + 5	69	33	12	23	6.5	M 6	88	15	6	67	
50	237	128 + 10	65	40	15	33.8	9	M 8	94	22	6	75.5	
63	237	128 + 10	97	40	15	29.3	9	M 8	98.5	22	6	80	
80	280	151 + 10	112	50	20	37	11	M 10	114	27	7	92	
100	280	156 + 10	112	55	20	40.5	11	M 10	115.5	27	7	93	
¯	**CO -0.3**	**CP**	**CR**	**CS**	**CT (A/F)**	**¯ CV f7**	**CW**	**É CX ±0.2**	**CY (A/F)**	**CZ**	**DA -0.3**	**DB ±0.3**	
32	97	90	74	50.5	17	12	61	32.5	5	125	50	45	
40	115	110	87	58.5	19	16	69	38	6	140	58	54	
50	137	130	104	70.5	24	20	85	46.5	6	150	70	63	
63	152	145	119	85.5	24	20	100	56.5	6	182	85	80	
80	189	180	148	105.5	30	25	130	72	8	215	105	100	
100	213	200	172	130.5	30	25	150	89	8	220	130	120	
Ø	**C**	**Ø DD**	**DE ±0.2**	**DF**	**Ø DG**	**Ø DH H7**	**DJ**	**Ø DK f6**	**DL**	**DM**	**T**	**at 0 mm**	**per 100 mm**
32	6.6	11	78	M 6	22.5	9	M 5	9	70.5	14	32.5	2.65 lb	0.40 lb
40	6.6	11	84	M 6	27.5	9	G 1/8	9	74.5	14	38.0	4.85 lb	0.71 lb
50	9	15	100	M 8	32.5	11	G 1/8	11	91.5	16	46.5	7.94 lb	1.08 lb
63	9	15	105	M 8	32.5	11	G 1/8	11	91.5	16	56.5	10.14 lb	1.08 lb
80	11	18	130	M 10	54.5	13	G 1/8	13	141.5	20	72.0	19.18 lb	1.70 lb
100	11	18	150	M 10	54.5	13	G 1/8	13	141.5	20	87.0	24.26 lb	1.70 lb

** Adjustment range
Note: Supplied complete with mounting screws for cylinders and two centering sleeves.

Attention
When using guide blocks (QA/8000/61) for profile cylinders PDA/182000 you have to order a model with a barrel which is turned at 90° (PDA/182000/IIL, .../MIL) so that the port threads are in line with the two switch grooves.

Guide blocks with roller bearings

QA/8000/61/*

Ø 32 ... 100 mm

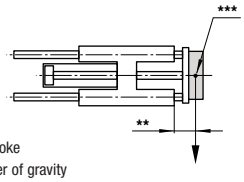

** Outstroke
*** Center of gravity

Maximum load capacity is dependent on the outstroke of a horizontally installed guide unit. In the case of short stroke operation, the load capacity figures taken from the diagram must be multiplied by the correction factor (diagram 2). In the curves of load capacity (diagram 1), the short stroke corrections have already been taken into account for an outstroke > 60 mm.

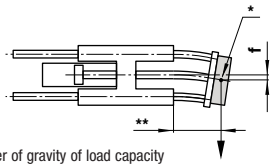

* Center of gravity of load capacity
** Outstroke

The total deflection of guide rods will be determined by the addition of that due to own weight (diagram 3) and that due to load capacity (diagram 4).

Maximum load capacity depending on outstroke (diagram 1)

Load capacity

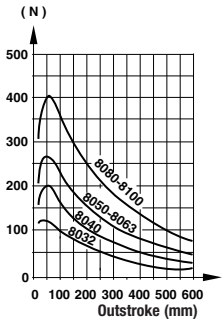

(diagram 2)

Correction factor

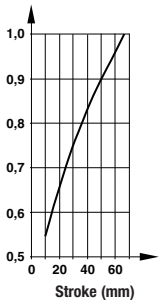

Deflection caused by own weight (diagram 3)

Deflection (mm)

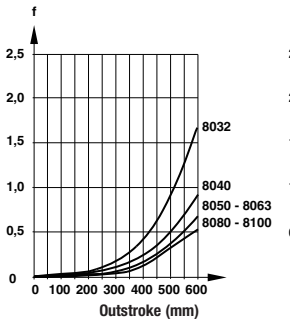

Deflection caused by a load of 10 N (diagram 4)

Deflection (mm)

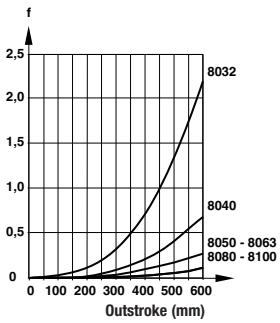

In the case of shock load applications, the figures given in the diagrams above must be reduced by a factor of 2.

NORGREN ENGINEERING ADVANTAGE

ISO/VDMA Profile cylinders

PDA/182000, PDA/182000/M

Double acting

Ø 32 ... 125 mm

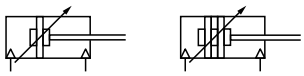

Conforms to ISO 6431, ISO 15552, VDMA 24562 and NFE 49-003-1

Profile barrel with concealed tie rods

High performance, stability and reliability

Polyurethane seals ensure efficient low friction operation and long life

Switches can be mounted flush with the profile barrel

Comprehensive range of standard mountings

Technical data

Medium:

Compressed air, filtered, lubricated or non-lubricated

Operation:

PDA/182000: Adjustable cushioning
PDA/182000/M: Magnetic piston, adjustable cushioning

Operating pressure:

15 to 232 psig (1 to 16 bar)

Operating temperature:

-4°F to +176°F
(-20°C to +80°C) max.
High temperature versions:
302°F (150°C) max.
Consult our Technical Service for use below +35°F (+2°C)

Strokes:

Standard: see next page
Non-standard strokes available (10 to 3000 mm)

Materials:

Profile barrel: anodized aluminum

End covers: pressure diecast aluminum

Piston rod: stainless steel (Martensitic)

Piston rod seals: polyurethane
Piston seals: polyurethane

'O-rings: nitrile rubber

Standard models

Ø	Piston rod Ø	Port size	Magnetic Standard	Magnetic Non-rotating	Non-magnetic Standard	Non-magnetic Non-rotating	Service kit Standard	Service Kit Non-rotating
32	12	G1/8	PDA/182032/M/*	PRA/182032/N2/*	PDA/182032/*	PRA/182032/N1/*	QA/8032/00	QA/8032/N1/00
40	16	G1/4	PDA/182040/M/*	PRA/182040/N2/*	PDA/182040/*	PRA/182040/N1/*	QA/8040/00	QA/8040/N1/00
50	20	G1/4	PDA/182050/M/*	PRA/182050/N2/*	PDA/182050/*	PRA/182050/N1/*	QA/8050/00	QA/8050/N1/00
63	20	G3/8	PDA/182063/M/*	PRA/182063/N2/*	PDA/182063/*	PRA/182063/N1/*	QA/8063/00	QA/8063/N1/00
80	25	G3/8	PDA/182080/M/*	PRA/182080/N2/*	PDA/182080/*	PRA/182080/N1/*	QA/8080/00	QA/8080/N1/00
100	25	G1/2	PDA/182100/M/*	PRA/182100/N2/*	PDA/182100/*	PRA/182100/N1/*	QA/8100/00	QA/8100/N1/00
125	32	G1/2	PDA/182125/M/*	–	PDA/182125/*	–	QA/8125/00	–

*Insert stroke length in mm.

Options selector

★P★A/182★★★/★★/★★★★

Special variants	Substitute
Heat resistant seals, 150°C max.	T
Hydraulic	H
Ecology seals	B

Piston rod material	Substitute
Chrome plated stainless steel	D
Non-chrome plated (for N1 and N2 options only)	R

Threads	Substitute
Metric ports: ISO 228 (G 1/8 to G 1)	A
NPT ports***	C

Cylinder diameters (mm)	Substitute
032, 040, 050, 063, 080, 100, 125	

Variants (magnetic piston)	Substitute
Standard	M
Special wiper/seal	W2
Low friction	X2
Piston rod bellow	MG
Without cushioning	MW
Without cushioning, low friction	X4
Double ended piston rod	JM
Double ended piston rod & special wiper/seal	W4
Four-position	MT
Non-rotating piston rod	N2
Locking unit	L4
Barrel turned at 90° for use with guide blocks	MIL
Extended piston rod	MU
Extended piston rod & special wiper/seal	W6
P*A/182***/MU/****/*** /W6/ → Extension (mm)	

*** Consult factory for NPT ports on bore sizes: 125, 160, 200, 250, 320

Strokes (mm)
3000 max.

Variants (non-magnetic piston)	Substitute
Standard	None
Special wiper/seal	W1
Low friction	X1
Piston rod bellow	G
Without cushioning	W
Without cushioning, low friction	X3
Double ended piston rod	J
Double ended piston rod, special wiper/seal	W3
Four-position	IT
Non-rotating piston rod	N1
Locking unit	L2
Barrel turned at 90° for use with guide blocks QA/8000/61/*	IIL
Extended piston rod	IU
Extended piston rod, special wiper/seal	W5
P*A/182***/IU/****/*** /W5/ → Extension (mm)	

Note: Disregard option positions not used.
For combinations of cylinder variants consult our Technical Service.

Norgren.com/usa – 303.794.2611 – help@amer.norgren.com

ISO/VDMA Profile cylinders

PDA/182000, PDA/182000/M

Double acting

Ø 32 ... 125 mm

Theoretical forces

Theoretical forces (lbs) at 87 psig

Cylinder Ø	Outstroke	Instroke
32	108	93
40	170	142
50	265	223
63	421	378
80	679	612
100	1060	994
125	1657	1548

Mountings

Ø	A	AK	B, G	C	D	D2	F
				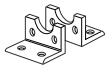			
32	QM/8032/35	**QM/8025/38**	**QA/8032/22**	**QA/8032/21**	**QA/8032/23**	**QA/8032/42**	**QM/8025/25**
40	QM/8032/35	QM/8040/38	**QA/8040/22**	**QA/8040/21**	**QA/8040/23**	**QA/8040/42**	**QM/8040/25**
50	QM/8050/35	**QM/8050/38**	**QA/8050/22**	**QA/8050/21**	**QA/8050/23**	**QA/8050/42**	**QM/8050/25**
63	QM/8050/35	**QM/8050/38**	**QA/8063/22**	**QA/8063/21**	**QA/8063/23**	**QA/8063/42**	**QM/8050/25**
80	QM/8080/35	QM/8080/38	**QA/8080/22**	**QA/8080/21**	**QA/8080/23**	**QA/8080/42**	**QM/8080/25**
100	QM/8080/35	QM/8080/38	**QA/8100/22**	**QA/8100/21**	**QA/8100/23**	QA/8100/42	**QM/8080/25**
125	QM/8125/35	QM/8125/38	**QM/8125/22**	QM/8125/21	**QM/8125/23**	QA/8125/42	**QM/8125/25**

Ø	L	M	R	S	SS	SW	UF	UH
	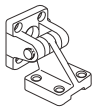	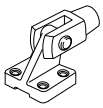						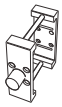
32	**QA/8032/24**	**QM/8032/26**	**QA/8032/27**	QA/8032/41	**M/P19931**	**M/P19493**	**QM/8025/32**	PQA/182032/40
40	**QA/8040/24**	**QM/8040/26**	**QA/8040/27**	**QA/8040/41**	**M/P19932**	**M/P19494**	**QM/8040/32**	PQA/182040/40
50	**QA/8050/24**	**QM/8050/26**	**QA/8050/27**	**QA/8040/41**	**M/P19933**	**M/P19495**	**QM/8050/32**	PQA/182050/40
63	**QA/8063/24**	**QM/8063/26**	**QA/8063/27**	**QA/8063/41**	**M/P19934**	**M/P19496**	**QM/8050/32**	PQA/182063/40
80	**QA/8080/24**	QM/8080/26	**QA/8080/27**	**QA/8063/41**	**M/P19935**	**M/P19497**	**QM/8080/32**	PQA/182080/40
100	**QA/8100/24**	QM/8100/26	**QA/8100/27**	QA/8100/41	M/P19936	**M/P19498**	**QM/8080/32**	PQA/182100/40
125	**QM/8125/24**	QM/8125/26	**QM/8125/27**	QA/8100/41	M/P19937	M/P19499	QM/8125/32	PQA/182125/40

Ø	UL	UR	US	Guide blocks*	Guide blocks*	Locking unit* (passive)	Groove-key
	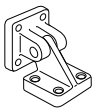			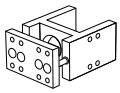	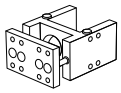		
32	**QA/8032/43**	**QA/8032/33**	**M/P40310**	QA/8032/51/*	QA/8032/61/*	**QA/8032/59**	Ø32 M/P72816
40	QA/8040/43	QA/8040/33	M/P40311	QA/8040/51/*	QA/8040/61/*	**QA/8040/59**	Ø40 M/P72816
50	**QA/8050/43**	**QA/8050/33**	**M/P40312**	QA/8050/51/*	QA/8050/61/*	**QA/8050/59**	Ø50 M/P72816
63	QA/8063/43	**QA/8063/33**	M/P40313	QA/8063/51/*	QA/8063/61/*	**QA/8063/59**	Ø63 M/P72816
80	QA/8080/43	**QA/8080/33**	**M/P40314**	QA/8080/51/*	QA/8080/61/*	**QA/8080/59**	Ø80 M/P72816
100	QA/8100/43	QA/8100/33	M/P40315	QA/8100/51/*	QA/8100/61/*	QA/8100/59	Ø100 M/P72816
125	QA/8125/43	QM/8125/33	M/P71355	–	–	QA/8125/59	

NORGREN
ENGINEERING ADVANTAGE

ISO/VDMA Profile cylinders

PDA/182000, PDA/182000/M

Double acting

Ø 32 ... 125 mm

Dimensions in mm

Standard cylinders

PDA/182000, PDA/182000/M

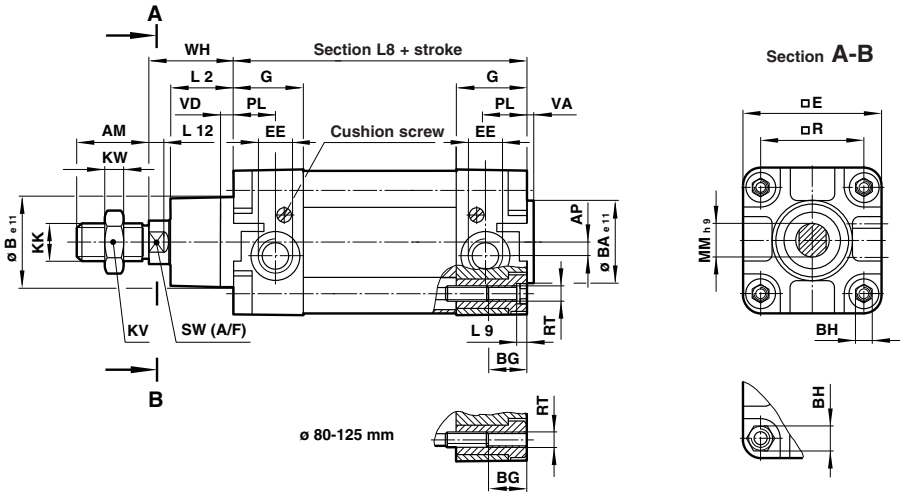

Ø	AM	AP	Ø B e11	Ø BA e11	BG	BH (A/F)	❑ E	EE	G	KK	KV (A/F)	KW	L2
32	22	3.5	30	30	18	6	47	G 1/8	27.5	M10 x 1.25	17	5	20
40	24	4.5	35	35	18	6	53	G 1/4	32	M12 x 1.25	19	6	22
50	32	6	40	40	18	8	65	G 1/4	31	M16 x 1.5	24	8	27
63	32	10	45	45	17.5	8	75	G 3/8	33	M16 x 1.5	24	8	29
80	40	8.5	45	45	21.5	19	95	G 3/8	33	M20 x 1.5	30	10	33
100	40	9	55	55	21.5	19	115	G 1/2	37	M20 x 1.5	30	10	36
125	54	10	60	60	30	24	140	G 1/2	46	M27 x 2	41	13.5	45

Ø	L8	L9	L12	Ø MM h9	PL	❑ R	RT	SW (A/F)	VA	VD	WH	at 0 mm	per 25 mm
32	94	4	6	12	13	32.5	M 6	10	3	6	26	1.12 lb	0.13 lb
40	105	4	6.5	16	15	38	M 6	13	3.5	6	30	1.80 lb	0.18 lb
50	106	5	8	20	18.5	46.5	M 8	17	3.5	6	37	2.93 lb	0.26 lb
63	121	5	8	20	19	56.5	M 8	17	4	6	37	3.97 lb	0.29 lb
80	128	–	10	25	19	72	M 10	22	4	6	46	7.17 lb	0.44 lb
100	138	–	10	25	18	89	M 10	22	4	6	51	10.6 lb	0.51 lb
125	160	–	13	32	22.5	110	M 12	27	6	15.5	65	17.6 lb	0.73 lb

ISO/VDMA Profile cylinders

PDA/182000, PDA/182000/M

Double acting

Ø 32 ... 125 mm

Dimensions in mm

Cylinder variants

PDA/182000/J, PDA/182000/JM — Cylinders with double ended piston rod

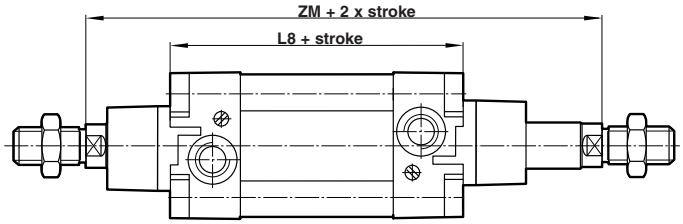

Ø	ZM	L8
32	146	94
40	165	105
50	180	106
63	195	121
80	220	128
100	240	138
125	290	160

PRA/182000/N1, PRA/182000/N2 — Cylinders with non-rotating piston rod

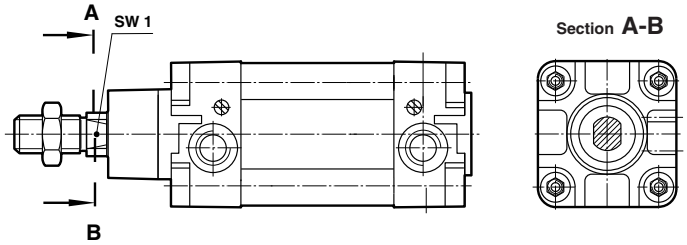

Ø	SW1 (A/F)
32	10
40	13
50	16
63	16
80	21
100	21

PDA/182000/IT, PDA/182000/MT – Four-position cylinders

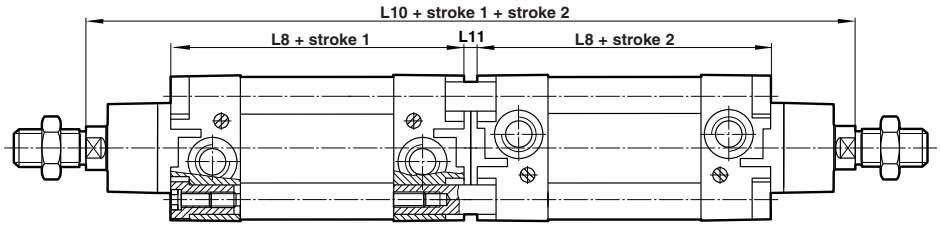

Ø	L 8	L 10	L 11
32	94	247	7
40	105	278	8
50	106	294	8
63	121	325	9
80	128	357	9
100	138	387	9
125	160	462	12

NORGREN
ENGINEERING ADVANTAGE

Cylinders with piston rod locking units (ISO/VDMA/NFE)

PDA/182000/L2 & L4, DA/8000/L2 & L4

Ø 32 ... 125 mm

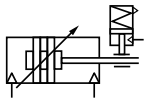

Passive

Magnetic and non-magnetic piston conforms to ISO 6431, ISO 15552, VDMA 24562 and NFE 49-003-1

Secure locking of piston rod in any position

Passive locking models

Compact, maintenance-free design

Technical data

Medium:

Compressed air, filtered, lubricated or non-lubricated

Type:

Passive model – pressure applied to release

Operating pressure:

58 to 145 psig (4 to 10 bar)

Operating temperature:

+32°F to 176°F (0°C to +80°C). Consult our Technical Service for use below +35°F (+2°C).

Materials

Body: hard anodised diecast aluminum

Seals: polyurethane & nitrile

Cartridge: anodized aluminum body

Locking wedges: hardened steel

Ø	Magnetic ISO/VDMA/NFE Profile cylinder	ISO/VDMA/NFE Tie-rod cylinder	Non-magnetic ISO/VDMA/NFE Profile cylinder	ISO/VDMA/NFE Tie-rod cylinder
32	PDA/182032/L4/*	DA/8032/L4/*	PDA/182032/L2/*	DA/8032/L2/*
40	PDA/182040/L4/*	DA/8040/L4/*	PDA/182040/L2/*	DA/8040/L2/*
50	PDA/182050/L4/*	DA/8050/L4/*	PDA/182050/L2/*	DA/8050/L2/*
63	PDA/182063/L4/*	DA/8063/L4/*	PDA/182063/L2/*	DA/8063/L2/*
80	PDA/182080/L4/*	DA/8080/L4/*	PDA/182080/L2/*	DA/8080/L2/*
100	PDA/182100/L4/*	DA/8100/L4/*	PDA/182100/L2/*	DA/8100/L2/*
125	PDA/182125/L4/*	DA/8125/L4/*	PDA/182125/L2/*	DA/8125/L2/*

* Insert stroke length in mm.
Locking unit includes cartridge
For non-magnetic versions substitute L2 for L4.
For all applications please consult our Technical Service.

Ø	Locking unit Passive	Spare cartridge only Passive
32	QA/8032/59	QA/8032/63
40	QA/8040/59	QA/8040/63
50	QA/8050/59	QA/8050/63
63	QA/8063/59	QA/8063/63
80	QA/8080/59	QA/8100/63
100	QA/8100/59	QA/8100/63
125	QA/8125/59	QA/8125/63

Locking unit

If retro fitting locking unit the cylinder must be of an extended piston rod design.

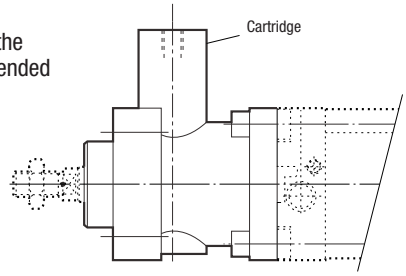

Norgren.com/usa – 303.794.2611 – help@amer.norgren.com

Cylinders with piston rod locking units (ISO/VDMA/NFE)

PDA/182000/L2 & L4, RA/8000/L2 & L4

Ø 32 ... 125 mm

Dimensions in mm

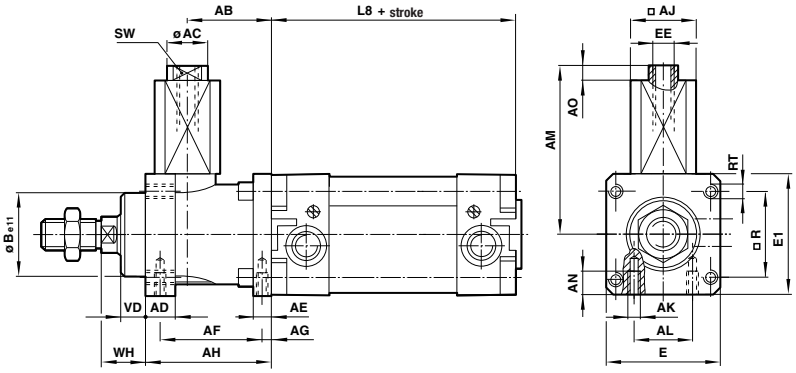

Ø	AB	Ø AC	AD	AE	AF	AG	AH	❑ AJ	AK	AL	AM	AN
32	32	10	12	8	40	4	48	22.5	M 5	20	71	8
40	35.5	10	12	10	46	4.5	55	27.5	M 5	24	74.5	10
50	49	15	16	15	54	11.5	70	32.5	M 6	30	91.5	12
63	49	15	15	15	55	7.5	70	41	M 8	38	108.5	12
80	62	19	16	16	.70	10	90	53	M 8	48	141.5	16
100	65	19	18	16	70	10	92	53	M 8	48	141.5	16
125	85	19	27	25	95	11	122	65	M 10	65	152	20

Ø	AO	Ø B e11	E	E 1	EE	L 8	❑ R	RT	SW (A/F)	VD	WH
32	4	30	48	50	M 5	94	32.5	M 6	8	10	16
40	4	35	56	58	G 1/8	105	38	M 6	8	10	18
50	4	40	68	70	G 1/8	106	46.5	M 8	13	12	22
63	4	45	82	85	G 1/8	121	56.5	M 8	13	12	20
80	4	45	100	105	G 1/8	128	72	M 10	17	20	33
100	4	55	120	130	G 1/8	138	89	M 10	17	23	38
125	4	60	140	150	G 1/8	160	110	M 12	17	32	65

Lock retention forces

Ø	Locking forces
32	135 lbs
40	225 lbs
50	338 lbs
63	495 lbs
80	1125 lbs
100	1125 lbs
125	1575 lbs

NORGREN
ENGINEERING ADVANTAGE

LINTRA®PLUS Rodless cylinders

C/146000, C/146100, C/146200

Internal, external and precision roller guided

Double acting

Ø 16 ... 80 mm

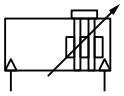

Lightweight design extrusion with universal mounting grooves

Proven and patented sealing system

Dust protection as standard (Ø 25 to 63 mm)

Interchangeability with series C/46000

Technical data

Medium:

Compressed air. filtered.
lubricated or non-lubricated

Operation:

C/146000/M, C/146100/M, C/146200/M
Double acting with adjustable cushioning and magnetic piston

Models:

C/146000 with internal guide
C/146100 with external adjustable guide
C/146200 with precision roller guide

Operating pressure:

14.5 to 116 psi (1 to 8 bar)

Operating temperature:

-22°F to 176°F (-30°C to +80°C) max.
(consult our Technical Service for use below 36°F [+2°C])

Cylinder diameter (mm):

16, 20, 25, 32, 40, 50, 63, 80

Max strokes:

Ø 16 to 40 mm: 27.9' (8500 mm)
Ø 50 and 63 mm: 26.2' (8000 mm)
Ø 80 mm: 18' (5500 mm)

Materials:

End covers: molded plastic (Ø 16), diecast aluminum (Ø 25 - 63)and anodized aluminum (Ø 20 & 80)
Yoke: anodized aluminum, molded plastic (Ø 16 & 20)
Carriage, closer & cover: aluminum diecast
Guiding bridge and profile barrel: anodized aluminum
Seal strip, wiper and piston seal: polyurethane
Cover strip: polyamide
Other seals: nitrile rubber

Standard models

Ø	Port size inch (mm)	Internal guide Magnetic	External guide Magnetic	Precision roller guide Magnetic
16	- (M5)	M/146016/M/*	M/146116/M/*	–
20	1/8 NPT (G-1/8)	C/146020/M/*	C/146120/M/*	–
25	1/8 NPT (G-1/8)	C/146025/MC/*	C/146125/MC/*	C/146225/MC/*
32	1/4 NPT (G-1/4)	C/146032/MC/*	C/146132/MC/*	C/146232/MC/*
40	1/4 NPT (G-1/4)	C/146040/MC/*	C/146140/MC/*	C/146240/MC/*
50	3/8 NPT (G-3/8)	C/146050/MC/*	C/146150/MC/*	C/146250/MC/*
63	1/2 NPT (G-1/2)	C/146063/MC/*	C/146163/MC/*	C/146263/MC/*
80	1/2 NPT (G-1/2)	C/146080/M/*	C/146180/M/*	–

* Cylinders shown above use NPT porting, stroke in inches
For ISO G porting insert an "M" in the first position and provide stroke length in mm.

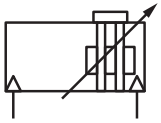

Magnetic piston

C/146000, C/146100, C/146200

Options selector

C / 146 ★★★ / MC / ★★★★

Optional finish	Substitute
Standard caps	Blank
Black anodized caps and carriage	A
Black anodized caps and carriage with stainless steel hardware	AS

Note: Options A and AS available only on metric port.

Ports	Substitute
NPT ports (Ø 20 to 80 mm)	C
Metric ports (Ø 16 to 80 mm)	M

Guiding system	Substitute
Internal	0
External	1
Roller	2

Cylinder Ø (mm)	Substitute
16	16
20	20
25	25
32	32
40	40
50	50
63	63
80	80

Note: Disregard option positions not used.
For combinations of cylinder variants consult our Technical Service.
This options selector explains only the cylinder variants.
Additional variants/options are not possible.

Strokes (on request)	
Provide in Inches	C version
Provide in Metric	M version

Options (magnetic piston) STD.	Substitute
Magnetic piston (standard on 16, 20, and 80 mm bores)	M
Alternative ports (standard 25, 32, 40, 50, 63 mm bores)	MC[1]
Active brake (25 to 63 mm bores)	L3
Passive brake (25 to 63 mm bores)	L4
With added caged ball linear motion guide	PM†
With linear position sensor (32 to 63 mm bores)	F1
Double carriages *	MD**

* For C/146100 & C/146200 only
** MD option available in 1461** External and 1462** Roller guided carriage

C/146***/MD/****/****
Effective stroke
Distance between carriage centers (inches)

1 Not available on 16, 20, 80 mm bores.
† Order PM option as 1462**

Ordering information

Cylinder
LINTRA® cylinder with internal guiding system.
Ø 32 mm cylinder diameter and 10' (3000 mm) stroke length with magnetic piston, and NPT ports.
Quote: **C/146032/MC/120**

NORGREN ENGINEERING ADVANTAGE

C/146000, C/146100, C/146200

Mountings

Ø mm	Type C Foot Mount 2	Type S Swinging Bridge 1	Type UV Carriage Bracket 6	Type UW Side Mounting Plate 4	Type V Center Support 3	Type W Secondary Carriage 5
	Page 120	Page 121	Page 121	Page 122	Page 120	Page 122
16	QM/146016/21	QM/146016/37	QM/146016/34	-	QM/146016/32	QM/146116/35
20	QM/146020/21	QM/146020/37	QM/146020/34	QM/146120/36	QM/146020/32	QM/146120/35
25	QM/146025/21	QM/146025/37	QM/146025/34	QM/146125/36	QM/146025/32	QM/146125/35
32	QM/146032/21	QM/146032/37	QM/146032/34	QM/146132/36	QM/146032/32	QM/146132/35
40	QM/146040/21	QM/146032/37	QM/146040/34	QM/146140/36	QM/146040/32	QM/146140/35
50	QM/146050/21	QM/146050/37	QM/146050/34	QM/146150/36	QM/146050/32	QM/146150/35
63	QM/146063/21	QM/146050/37	QM/146063/34	QM/146163/36	QM/146063/32	QM/146163/35
80	QM/146080/21	QM/146080/37	QM/146080/34	-	QM/146080/32	QM/146180/35

Ø mm	Assembly kit for caged ball linear motion guide 10	Adjustable stop 8	Assembly kit for shock absorbers 12	Groove key for profile barrel 7	Groove key for guiding bridge 9
			Page 123	Page 120	Page 120
25	QM/146225/P/70	QM/146125/75	QM/146125/67	M/P74065	M/P74065
32	QM/146232/P/70	QM/146132/75	QM/146132/67	M/P74065	M/P74065
40	QM/146240/P/70	QM/146140/75	QM/146140/67	M/P74065	M/P74066
50	QM/146250/P/70	–	QM/146150/67	M/P74065	M/P41858
63	QM/146263/P/70	–	QM/146163/67	M/P74065	M/P41858

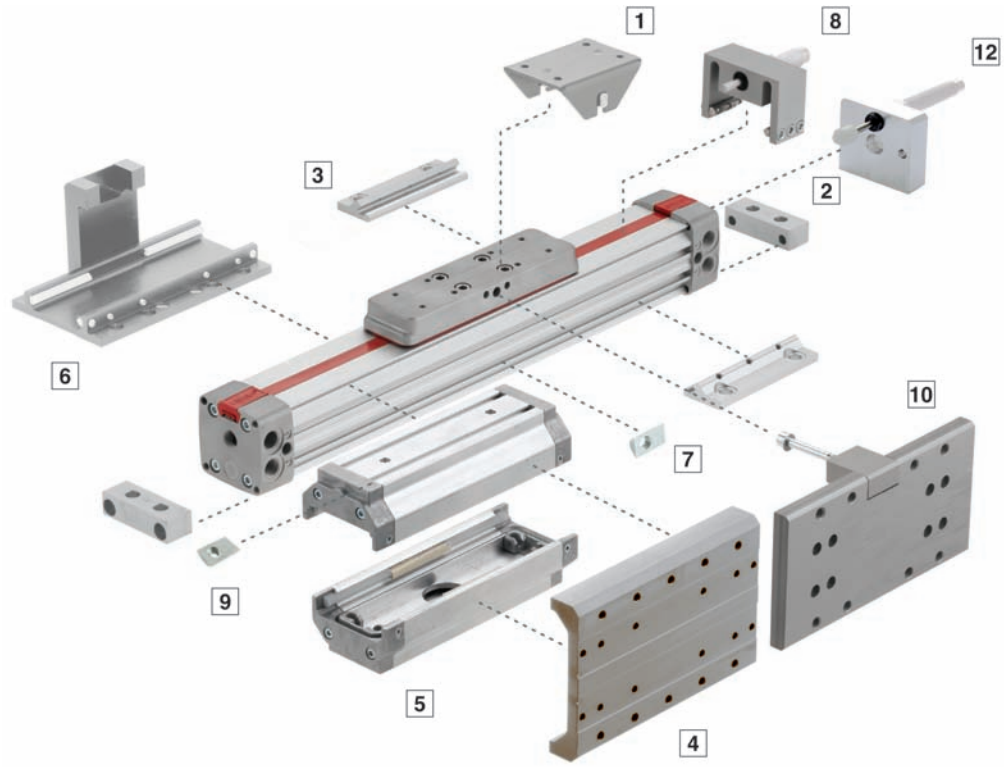

Cushioning Performance

The dynamic energy of a LINTRA® cylinder is caused by direct or partial external loads which must be absorbed by pneumatic cushioning.
The cushioning ability depends to a large extent on the pneumatic circuit (e. g. counter pressure, pre-exhaust). The values given in the diagram were tested with an operation pressure of 87 psi (6 bar) using a 5/2 control valve. When installed horizontally, depending upon the speed, dynamic energy can be absorbed by the cylinder. Whenever the values given in the diagram are exceeded, the transported mass must be cushioned by additional shock absorbers. These have to be located at the center of gravity of the mass.

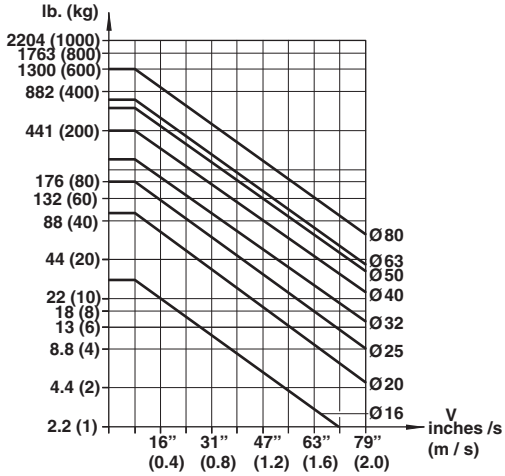

Cylinder deflection

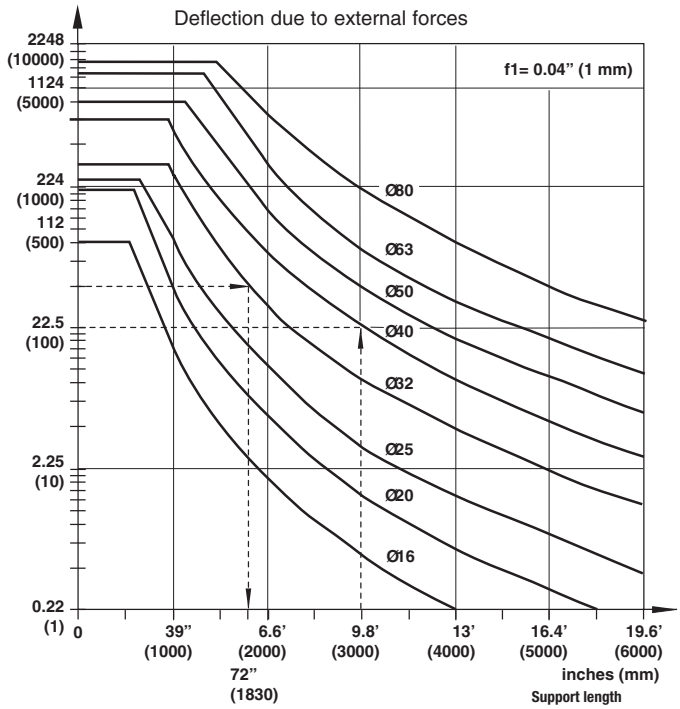

Example:
Cylinder Ø 32 mm, stroke length 11' (3500 mm), external load 45 lbf. (200 N) and a deflection about 0.04 (1 mm).
Maximum distance between supports = 6' (1830 mm) (see diagrams).
Therefore an additional support is required.

Deflection due to cylinder weight

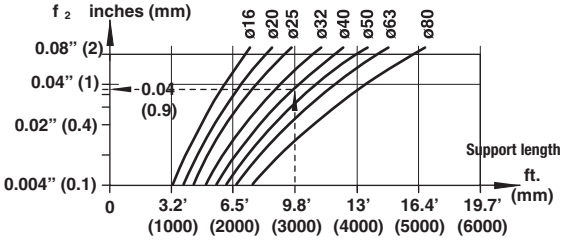

Example:
Cylinder Ø 40 mm. external force 40 lbf (180 N), distance between supports 10' (3000 mm)
Required: total deflection
1. Deflection due to external force (f1)
   see Diagram 1 (1mm/100 N) · 40 lbf (180 N)
2. Deflection due to cylinder weight diagram 2

Total deflection:

	0.07"(1.8 mm)
	+ 0.04"(0.9 mm)
Max. permitted deflection (f1 + f2)	**0.2" (2.7 mm)**
A deflection of more than 0.12" (3 mm) is not permitted.	**< 0.04"(1 mm)**
	39"(1000 mm) Stroke

NORGREN ENGINEERING ADVANTAGE

C/146000, C/146100, C/146200

Theoretical forces, air consumption, cushioning length, holding forces

Cylinder Ø mm	Theoretical forces lbf (N) at 87 psi (6 bar)	Air consumption ft^3/in. (l/cm) of stroke at 87 psi (6 bar)	Cushioning length inches (mm)	Holding forces lbf. (N) of brake (on dry braking surface) active (L3) at 87 psi (6 bar)	passive (L4)
16	27 (120)	0.001 (0.014)	0.5 (12)	–	–
20	42 (188)	0.002 (0.022)	1 (26)	–	–
25	66 (294)	0.003 (0.035)	1 (26)	112 (5000	50 (220)
32	108 (482)	0.005 (0.056)	1.4 (35)	202 (900)	84 (375)
40	170 (754)	0.008 (0.088)	2 (50)	337 (1500)	141 (630)
50	265 (1178)	0.012 (0.137)	2.3 (60)	562 (2500)	225 (1000)
63	420 (1870)	0.02 (0.218)	2.8 (70)	899 (4000)	371 (1650)
80	678 (3016)	0.03 (0.350)	3 (75)	–	–

C/146000, C/146100, C/146200

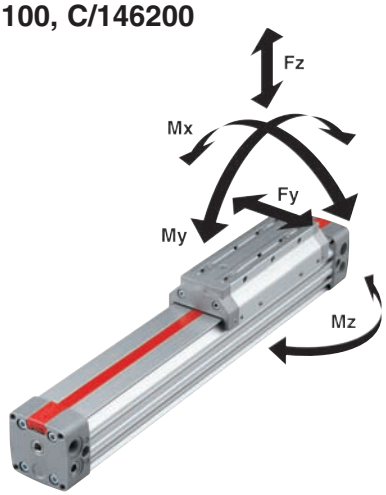

C/146200/P

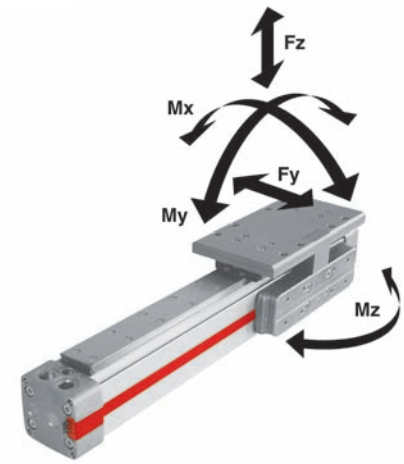

	Internal guide C/146000					External adjustable guide C/146100			Precision roller guide C/146200				Added caged ball linear motion guide C/146200/P		
Ø mm	Fy lbf. (N)	Fz lbf. (N)	Mx lbf in. (Nm)	My lbf in. (Nm)	Mz lbf in. (Nm)	Fy, Fz lbf. (N)	Mx lbf in. (Nm)	My, Mz lbf in. (Nm)	Fy lbf. (N)	Fz lbf. (N)	Mx lbf in. (Nm)	My, Mz lbf in. (Nm)	Fy, Fz lbf. (N)	Mx lbf in. (Nm)	My, Mz lbf in. (Nm)
16	9 (40)	27 (120)	2.7 (0.3)	33.6 (3.8)	9.7 (1.1)	45 (200)	17.7 (2)	48.7 (5.5)	– –	– –	– –	– –	– –	– –	– –
20	20 (90)	63 (280)	8.0 (0.9)	106.2 (12)	31.9 (3.6)	106 (470)	53.1 (6)	159.3 (18)	– –	– –	– –	– –	– –	– –	– –
25	28 (125)	87 (385)	13.3 (1.5)	168.2 (19)	49.6 (5.6)	133 (590)	79.7 (9)	247.8 (28)	133 (590)	266 (1180)	115.1 (13)	371.7 (42)	450 (2000)	283 (32)	1770 (200)
32	37 (165)	113 (500)	26.6 (3)	292.1 (33)	88.5 (10)	176 (780)	150.5 (17)	380.6 (43)	176 (780)	351 (1560)	221.3 (25)	566.5 (64)	899 (4000)	566 (64)	3540 (400)
40	74 (330)	223 (990)	57.5 (6.5)	743.5 (84)	212.4 (24)	360 (1600)	345.2 (39)	973.6 (110)	338 (1500)	676 (3000)	513.4 (58)	1416.2 (160)	899 (4000)	566 (64)	3540 (400)
50	99 (440)	297 (1320)	97.4 (11)	1062.1 (120)	309.8 (35)	450 (2000)	575.3 (65)	1416.2 (160)	450 (2000)	901 (4000)	858.6 (97)	2124.3 (240)	1798 (8000)	1593 (180)	7080 (800)
63	155 (690)	450 (2000)	177.0 (20)	2124.3 (240)	619.6 (70)	721 (3200)	1062.1 (120)	3097.9 (350)	721 (3200)	1441 (6400)	1593.2 (180)	4602.6 (520)	1798 (8000)	1593 (180)	7966 (900)
80	176 (780)	518 (2300)	239.0 (27)	3186.4 (360)	885.1 (100)	878 (3900)	1593.2 (180)	4602.6 (520)	–	–	–	–	–	–	–

Loading values applicable to a speed of ≤0.2 m/s. Maximum working life is normally reached below a speed of 1 m/s.
* The forces and moments refers to the center of the guide. They must not be exceeded in dynamic applications.

Loading values for LINTRA® cylinders with double carriages

The values given in the table below show the single forces in the directions Fy and Fz and the maximum moments Mx, My and Mz. All values are applicable only for speeds of max. 0.2 m/s.
A requirement for using these values is a constant movement (no jerking) of the mass over the whole stroke length of the cylinder.
The reference point from which the moments for all cylinders should be calculated is the center line of the pistons.

When a LINTRA® cylinder has to take several loads and moments. an additional calculation is necessary using this formula:

$$\frac{Mx}{Mx\ max} + \frac{My}{My\ max} + \frac{Mz}{Mz\ max} + \frac{Fy}{Fy\ max} + \frac{Fz}{Fz\ max} \leq 1$$

C/146000, C/146100, C/146200

C/146100/MD

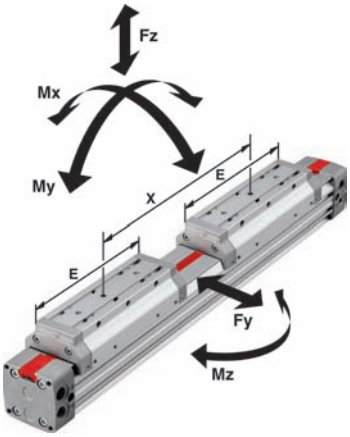

Ø mm	External adjustable guide. C/146100/MD Fy. Fz lbf (N)	Mx lbf in (Nm)	My. Mz (Nm) x min.=E lbf in (Nm)	x=4" (100 mm) lbf in (Nm)	x=6" (150 mm) lbf in (Nm)	x=8" (200 mm) lbf in (Nm)	x=10" (250 mm) lbf in (Nm)	x=12" (300 mm) lbf in (Nm)	x=14" (350 mm) lbf in (Nm)	x=16" (400 mm) lbf in (Nm)	x=18" (450 mm) lbf in (Nm)	x=20" (500 mm) lbf in (Nm)
16	90	36	120	156	204	252	312	360	420	480	528	588
	(400)	(4)	(14)	(17)	(23)	(29)	(35)	(41)	(48)	(54)	(60)	(66)
20	211.33	1296	6768	–	8496	10512	1272	1236	1404	1572	1740	1920
	(940)	(12)	(64)	–	(80)	(99)	(119)	(139)	(158)	(178)	(197)	(217)
25	265.29	156	852	–	936	1164	1368	1596	1812	2040	2256	2472
	(1180)	(18)	(96)	–	(106)	(131)	(155)	(180)	(205)	(230)	(255)	(279)
32	350.72	300	1368	–	–	1596	1884	2172	2460	2748	3036	3324
	(1560)	(34)	(155)	–	–	(181)	(213)	(246)	(278)	(310)	(343)	(375)
40	674.46	696	3480	–	–	–	3852	4392	4932	5472	6012	6552
	(3000)	(78)	(393)	–	–	–	(435)	(496)	(557)	(618)	(679)	(740)
50	899.28	1152	4044	–	–	–	4044	4584	5124	5652	6192	6732
	(4000)	(130)	(457)	–	–	–	(457)	(518)	(579)	(639)	(700)	(761)
63	1438.85	2124	11328	–	–	–	–	–	12036	13272	14424	15660
	(6400)	(240)	(1280)	–	–	–	–	–	(1360)	(1500)	(1630)	(1770)
80	1753.60	3192	16908	–	–	–	–	–	–	17172	18672	20088
	(7800)	(360)	(1910)	–	–	–	–	–	–	(1940)	(2110)	(2270)

Ø mm	Precision roller guide C/146200/MD Fy. Fz lbf (N)	Mx lbf in (Nm)	My. Mz x min.=E lbf in (Nm)	x=4" (100 mm) lbf in (Nm)	x=6" (150 mm) lbf in (Nm)	x=8" (200 mm) lbf in (Nm)	x=10" (250 mm) lbf in (Nm)	x=12" (300 mm) lbf in (Nm)	x=14" (350 mm) lbf in (Nm)	x=16" (400 mm) lbf in (Nm)	x=18" (450 mm) lbf in (Nm)	x=20" (500 mm) lbf in (Nm)
25	265	228	1104	–	1224	1500	1788	2076	2364	2652	2940	3216
	(1180)	(26)	(125)	–	(138)	(170)	(202)	(234)	(267)	(299)	(332)	(363)
32	351	444	1788	–	–	2076	2448	2832	3192	3564	3948	4320
	(1560)	(50)	(202)	–	–	(235)	(277)	(320)	(361)	(403)	(446)	(488)
40	674	1032	4524	–	–	–	5004	5712	6408	7104	7812	8520
	(3000)	(116)	(511)	–	–	–	(566)	(645)	(724)	(803)	(883)	(962)
50	899	1716	5256	–	–	–	5256	5952	6660	7356	8052	8748
	(4000)	(194)	(594)	–	–	–	(594)	(673)	(753)	(831)	(910)	(989)
63	1439	3192	14724	–	–	–	–	–	15648	16368	18756	20364
	(6400)	(360)	(1664)	–	–	–	–	–	(1768)	(1850)	(2119)	(2301)

Loading values applicable to a speed of ≤0.2 m/s. Maximum working life is normally reached below a speed of 1 m/s.
* The forces and moments refers to the center of the guide. They must not be exceeded in dynamic applications.

Loading values for LINTRA® cylinders with double carriages

The values given in the table below show the single forces in the directions Fy and Fz and the maximum moments Mx, My and Mz. All values are applicable only for speeds of max. 0.2 m/s.
A requirement for using these values is a constant movement (no jerking) of the mass over the whole stroke length of the cylinder.
The reference point from which the moments for all cylinders should be calculated is the center line of the pistons.

For speeds up to 2 m/s please use our calculation program LINTRA® PNEUCALC. It is available upon request.
When a LINTRA® cylinder has to take several loads and moments. an additional calculation is necessary using this formula:

$$\frac{Mx}{Mx\ max} + \frac{My}{My\ max} + \frac{Mz}{Mz\ max} + \frac{Fy}{Fy\ max} + \frac{Fz}{Fz\ max} \leq 1$$

NORGREN
ENGINEERING ADVANTAGE

Cylinder with internal guide

C/146000 cylinder ø 20 to 80 mm
M/146000 cylinder ø 16 to 80 mm

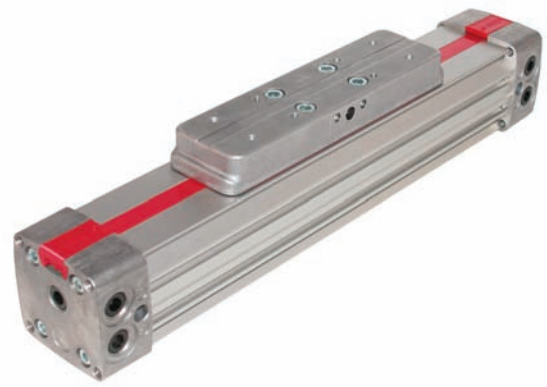

C/146000 – cylinder with internal guide (ø 20 mm)
M/146000 – cylinder with internal guide (ø 16 and 20 mm)

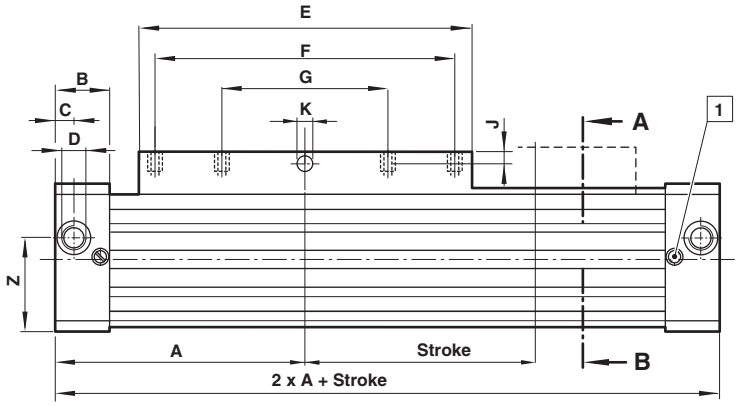

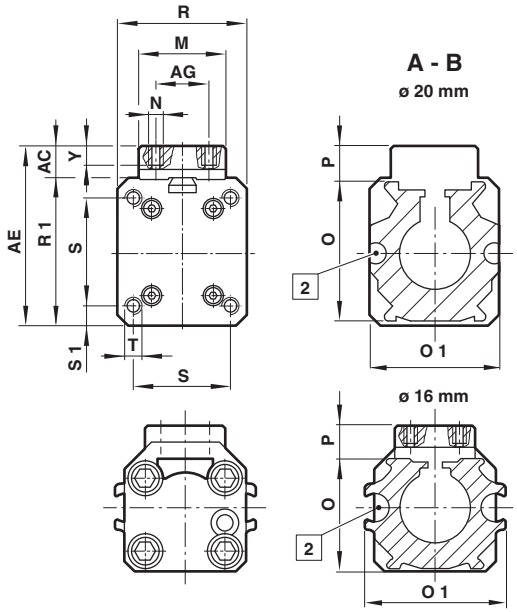

1 Cushion screw

2 M/50 – switches and groove key can be mounted flush with the profile

Type	Ø	A	AC	AE	AG	B	C	D	E	F	G	J	Ø K^{D7}
M/146016/...	16	2.46	0.28	1.50	0.31	0.69	0.31	M5	3.15	2.36	–	0.10	0.12
		(62.5)	(7)	(38)	(8)	(17.5)	(8)	M5	(80)	(60)	–	(2.5)	(3)
C/146020/...	20	3.34	0.55	2.13	0.71	0.91	0.31	1/8 NPT	4.33	3.15	1.57	0.14	0.17
		(85)	(14)	(54)	(18)	(23)	(8)	G1/8	(110)	(80)	(40)	(3.5)	(4.2)

Type	Ø	M	N	O	O 1	P	R	R 1	S	S 1	T	Y	Z	Weight at 0 mm	Weight per 100 mm
M/146016/...	16	0.71	M3	0.98	1.26	0.47	1.06	1.22	0.63	0.22	M3-5*	0.16	0.65	0.35 lbs..	0.22 lbs.
		(18)	M3	(25)	(32)	(12)	(27)	(31)	(16)	(5.5)	M3-5*	(4)	(16.5)	(0.35 kg)	(0.10 kg)
C/146020/...	20	1.06	M5	1.26	1.50	0.73	1.57	1.57	1.26	0.16	M5-12*	0.47	0.81	1.10 lbs.	0.33 lbs.
		(27)	M5	(32)	(38)	(18.5)	(40)	(40)	(32)	(4)	M5-12*	(12)	20.5	(0.50 kg)	(0.15 kg)

* deep

C/146000, C/146100, C/146200

C/146000 – cylinder with internal guide (ø 25 ... 63 mm)

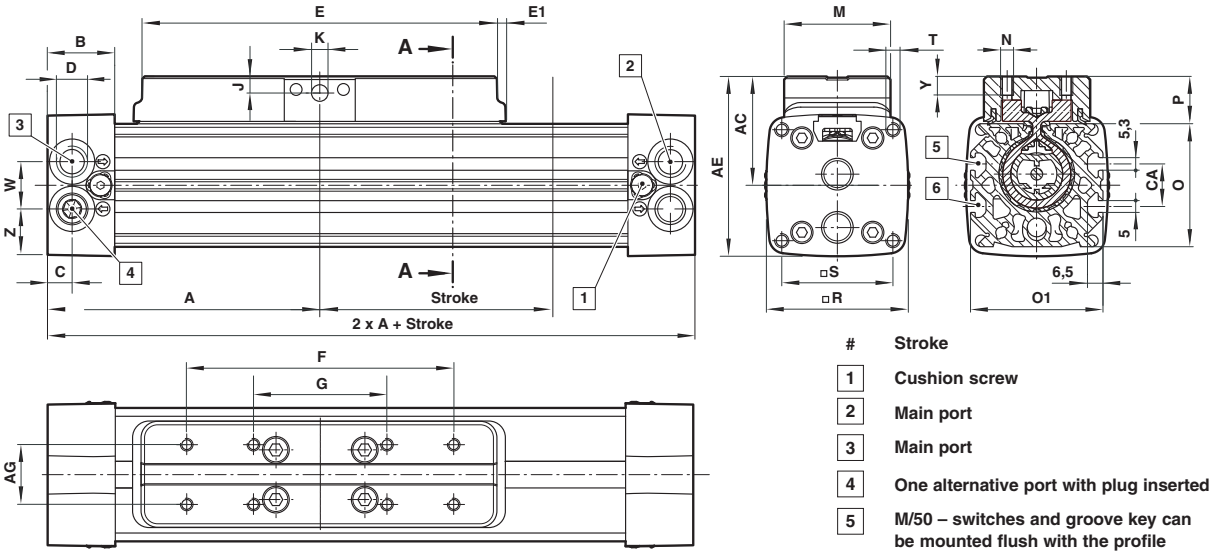

#	Stroke
1	Cushion screw
2	Main port
3	Main port
4	One alternative port with plug inserted
5	M/50 – switches and groove key can be mounted flush with the profile
6	For groove key only

Type	Ø	A	AC	AE	AG	B	C	CA	D	E	E1	F	G	J	Ø K^{D7}
C/146025/...	25	3.94	1.42	2.20	0.78	0.91	0.33	–	1/8 NPT	5.12	–	3.54	1.77	0.19	0.20
		(100)	(36)	(56)	(20)	(23)	(8.5)	–	G1/8	(130)	–	(90)	(45)	(4.7)	(5)
C/146032/...	32	4.72	1.81	2.99	0.98	1.12	0.41	0.71	1/4 NPT	6.30	0.14	4.72	2.36	0.28	0.28
		(120)	(46)	(76)	(25)	(28.5)	(10.5)	(18)	G1/4	(160)	(3.5)	(120)	(60)	(7)	(7)
C/146040/...	40	5.91	2.07	3.54	0.98	1.12	0.45	0.71	1/4 NPT	8.46	–	6.30	3.15	0.28	0.28
		(150)	(52.5)	(90)	(25)	(28.5)	(11.5)	(18)	G1/4	(215)	–	(160)	(80)	(7)	(7)
C/146050/...	50	7.09	2.58	4.33	0.98	1.50	0.59	0.94	3/8 NPT	9.84	–	7.48	3.74	0.37	0.35
		(180)	(65.5)	(110)	(25)	(38)	(15)	(24)	G3/8	(250)	–	(190)	(95)	(9.5)	(9)
C/146063/...	63	8.46	3.25	4.92	0.98	1.50	0.67	–	1/2 NPT	12.60	–	9.45	4.72	0.37	0.35
		(215)	(82.5)	(125)	(25)	(38)	(17)	–	G1/2	(320)	–	(240)	(120)	(9.5)	(9)

Type	Ø	M	N	O	O 1	P	R	S	T	W	Y	Z	Weight at 0 mm	Weight per 100 mm
C/146025/...	25	1.26	M5	1.57	1.81	0.63	1.89	1.46	M5-13*	0.63	0.28	0.63	1.5 lbs.	0.55 lbs.
		(32)	M5	(40)	(46)	(16)	(48)	(37)	M5-13*	(16)	(7)	(16)	0.7 kg	0.25 kg
C/146032/...	32	1.77	M5	2.05	2.20	0.79	2.36	1.85	M6-17*	0.79	0.31	0.79	3 lbs.	0.66 lbs.
		(45)	M5	(52)	(56)	(20)	(60)	(47)	M6-17*	(20)	(8)	(20)	1.40 kg	0.30 kg
C/146040/...	40	1.77	M6	2.56	2.68	0.79	2.93	2.28	M8-20*	0.98	0.31	0.98	5.5 lbs.	0.93 lbs.
		(45)	M6	(65)	(68)	(20)	(74.5)	(58)	M8-20*	(25)	(8)	(25)	2.50 kg	0.42 kg
C/146050/...	50	1.97	M8	3.15	3.31	1.00	3.50	2.76	M8-20*	1.18	0.43	1.16	9.7 lbs.	1.3 lbs.
		(50)	M8	(80)	(84)	(25.5)	(89)	(70)	M8-20*	(30)	(11)	(29.5)	4.40 kg	0.62 kg
C/146063/...	63	1.97	M8	3.74	3.82	0.98	4.13	3.31	M10-24*	1.38	0.43	1.38	15.2 lbs.	2 lbs.
		(50)	M8	(95)	(97)	(25)	(105)	(84)	M10-24*	(35)	(11)	(35)	6.90 kg	0.9 kg

* deep

C/146080 – cylinder with internal guide (ø 80 mm)

Type	Ø	Weight at 0 mm	Weight per 100 mm
C/146080/	80	29 lbs. (13.20 kg)	3 lbs. (1.50 kg)

2 M/50 – switches and groove key can be mounted flush with profile

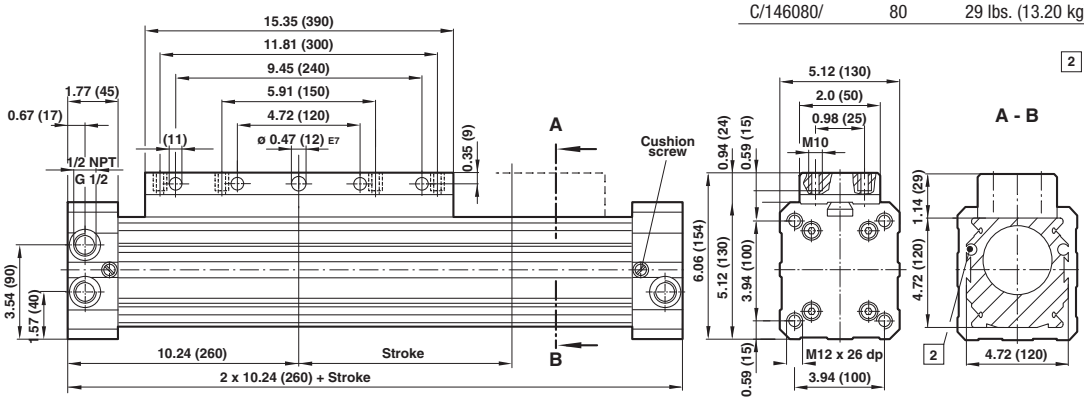

NORGREN
ENGINEERING ADVANTAGE

Cylinder with external adjustable guide

C/146100 cylinder ø 20 to 80 mm
M/146100 cylinder ø 16 to 80 mm

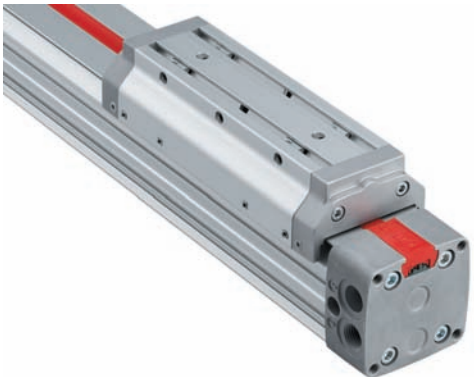

C/146100 – cylinder with external guide (ø 20 mm)
M/146100 – cylinder with external guide (ø 16 & 20 mm)

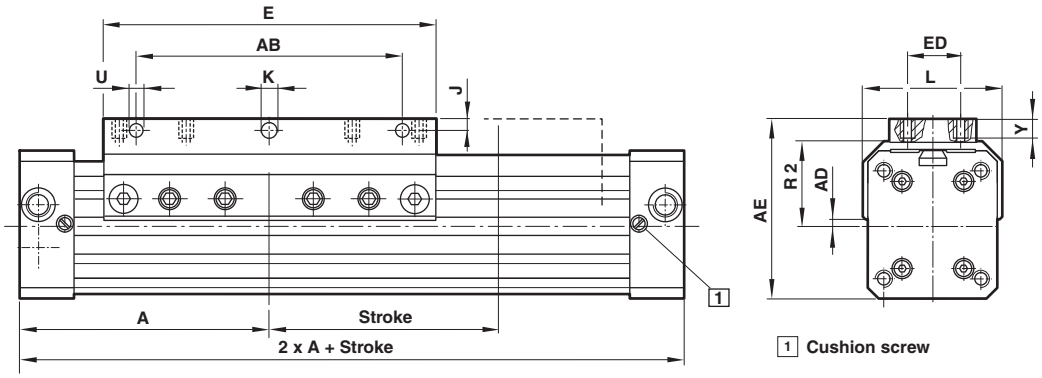

Type	Ø	A	AB	AE	AD	E	M	J	Ø K	L	R 2	U	Y	Weight at 0 mm	Weight per 100 mm
M/146116/...	16	2.46	–	1.50	0.30	3.15	0.71	–	–	1.22	0.73	–	0.20	0.31 oz.	0.22 lbs.
		(62.5)	–	(38)	(7.5)	(80)	(18)	–	–	(31)	(18.5)	–	(5)	0.18 kg	0.10 kg
C/146120/...	20	3.35	2.36	2.32	0.26	4.33	1.06	0.30	0.22	1.65	0.94	0.22	0.47	1.3 oz.	0.33 lbs.
		(85)	(60)	(59)	(6.5)	(110)	(27)	(7.5)	(5.5)	(42)	(24)	(5.5)	(12)	0.60 kg	0.15 kg

C/146100 – cylinder with external adjustable guide (ø 25 ... 63 mm)

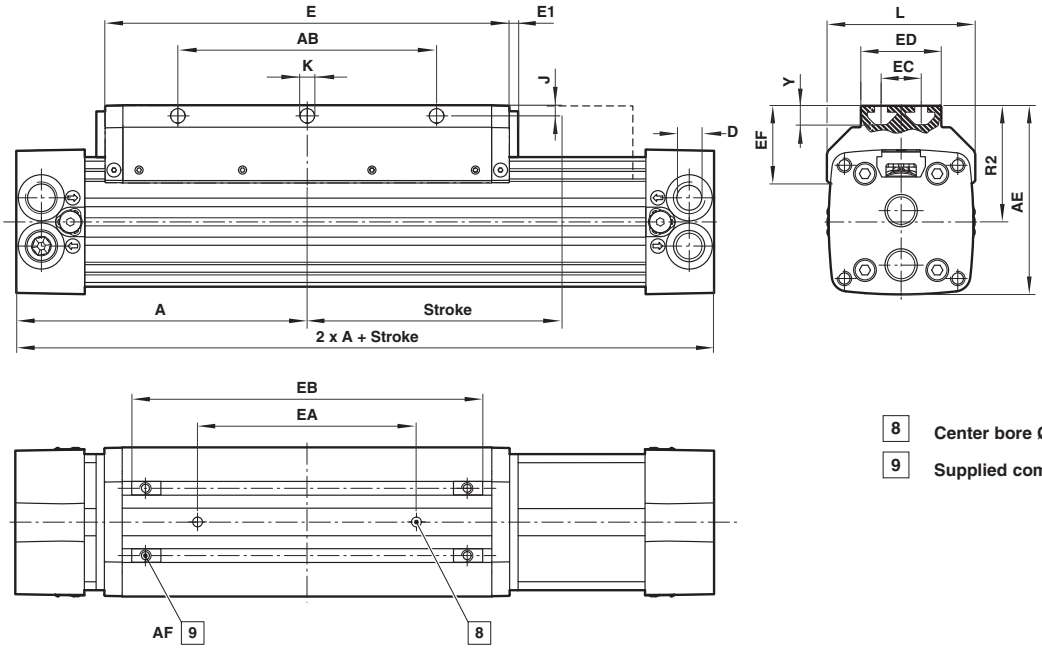

8 Center bore Ø 6 H7. 4 deep

9 Supplied complete with four groove keys

Type	Ø	A	AB	AE	AF	D	E	E1	EA ±0.05	EB	ED	EC	EF	J	Ø K	L	R 2	Y	Weight at 0 mm	Weight per 100 mm
C/146125/..	25	3.94	2.76	2.66	M5	1/8 NPT	5.12	–	1.97	4.02	1.26	0.79	1.34	0.20	0.22	2.05	–	0.37	1.7 lbs.	0.44 lbs.
		(100)	(70)	(67.5)		G1/8	(130)	–	(50)	(102)	(32)	(20)	(34)	(5)	(5.5)	(52)	–	(9.5)	0.75kg	0.20 kg
C/146132/..	32	4.72	3.54	3.23	M5	1/4 NPT	6.30	0.16	2.76	5.43	1.77	0.98	1.44	0.20	0.22	2.52	2.05	0.26	3.3 lbs.	0.66 lbs.
		(120)	(90)	(82)		G1/4	(160)	(4)	(70)	(138)	(45)	(25)	(36.5)	(5)	(5.5)	(64)	(52)	(6.5)	1.50 kg	0.30 kg
C/146140/..	40	5.91	4.72	3.84	M6	1/4 NPT	8.46	–	4.13	7.60	1.77	0.98	1.69	0.20	0.26	3.11	2.36	0.37	5.7 lbs.	0.93 lbs.
		(150)	(120)	(97.5)		G1/4	(215)	–	(105)	(193)	(45)	(25)	(43)	(5)	(6.6)	(79)	(60)	(9.5)	2.60 kg	0.42 kg
C/146150/..	50	7.09	6.30	4.59	M8	3/8 NPT	9.84	–	5.31	8.98	1.97	0.98	1.87	0.26	0.35	3.62	2.83	0.45	10 lbs.	1.4 lbs.
		(180)	(160)	(116.5)		G3/8	(250)	–	(135)	(228)	(50)	(25)	(47.5)	(6.5)	(9)	(92)	(72)	(11.5)	4.50 kg	0.62 kg
C/146163/..	63	8.46	7.48	5.39	M8	1/2 NPT	12.60	–	5.91	11.50	1.97	0.98	2.32	0.30	0.35	4.33	3.33	0.65	16 lbs.	2 lbs.
		(215)	(190)	(137)		G1/2	(320)	–	(150)	(292)	(50)	(25)	(59)	(7.5)	(9)	(110)	(84.5)	(16.5)	7.20kg	0.90 kg

C/146180 – cylinder with external adjustable guide (ø 80 mm)

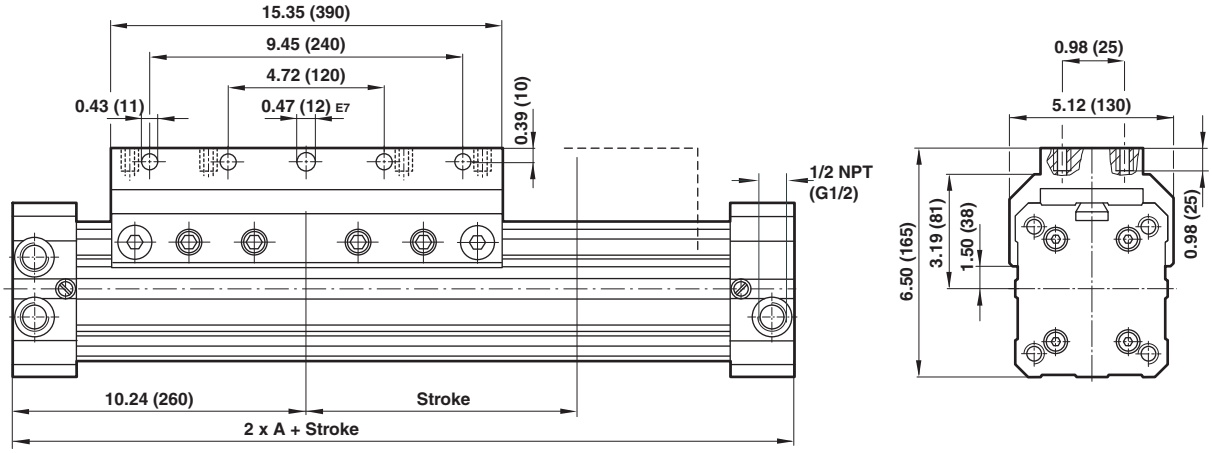

Type	Ø	Weight at 0 mm	Weight per 100 mm
C/146180/	80	29.5 lbs. (13.40 kg)	3.3 lbs. (1.50 kg)

NORGREN
ENGINEERING ADVANTAGE

Cylinder with external adjustable guide and double carriages

C/146100 cylinder ø 20 to 80 mm
M/146100 cylinder ø 16 to 80 mm

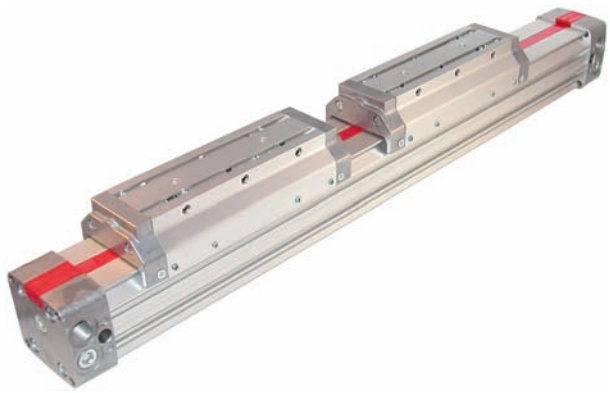

C/146100/MD – cylinder with external adjustable guide and double carriages(ø 20 mm)
M/146100/MD – cylinder with external adjustable guide and double carriages(ø 16 and 20 mm)

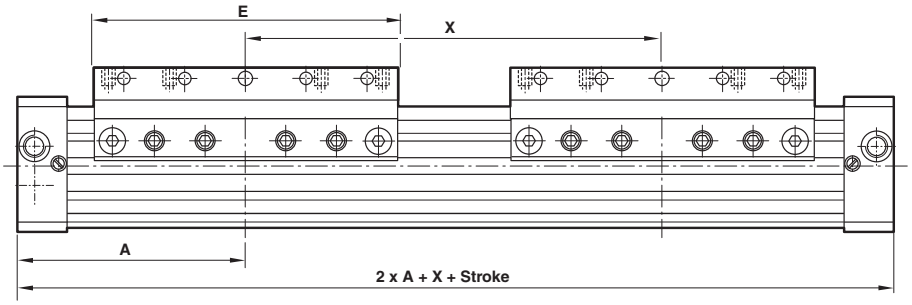

Type	Ø	A	E	X min.	X max.	Weight at 0 mm	Weight per 100 mm
M/146116/D	16	2.46	3.15	3.15	19.69	0.44 lbs.	0.22 lbs.
		(62.5)	(80)	(80)	(500)	0.20 kg	0.10 kg
C/146120/D	20	3.35	4.33	4.33	19.69	1.75 lbs.	0.33 lbs.
		(85)	(110)	(110)	(500)	0.80 kg	0.15kg

C/146100/MD – cylinder with external adjustable guide and double carriages (ø 25 ... 63 mm)

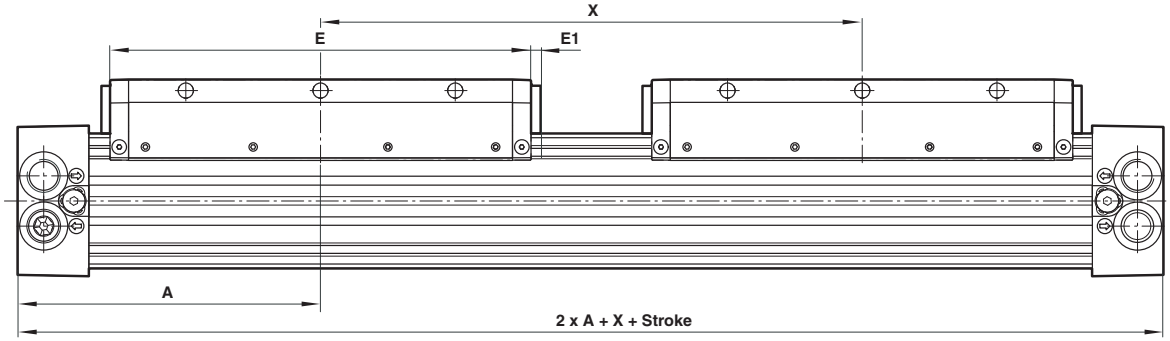

Type	Ø	A	E	E1	X min.=E*	X max.	Weight at 0 mm	Weight per 100 mm
C/146125/MD	25	3.94	5.12	–	5.12	19.69	3.3 lbs.	0.44 lbs.
		(100)	(130)	–	(130)	(500)	1.50 kg	0.20 kg
C/146132/MD	32	4.72	6.30	0.16	6.61	19.69	4.4 lbs.	0.66 lbs.
		(120)	(160)	(4)	(168)	(500)	2.00 kg	0.30 kg
C/146140/MD	40	5.91	8.46	–	8.46	19.69	7 lbs.	0.93 lbs.
		(150)	(215)	–	(215)	(500)	3.20 kg	0.42 kg
C/146150/MD	50	7.09	9.84	–	9.84	19.69	12 lbs.	1.4 lbs.
		(180)	(250)	–	(250)	(500)	5.40 kg	0.62 kg
C/146163/MD	63	8.46	12.60	–	12.60	19.69	18.5 lbs.	2.2 lbs.
		(215)	(320)	–	(320)	(500)	8.40 kg	1.00 kg

C/146180/MD – cylinder with external adjustable guide and double carriages (ø 80 mm)

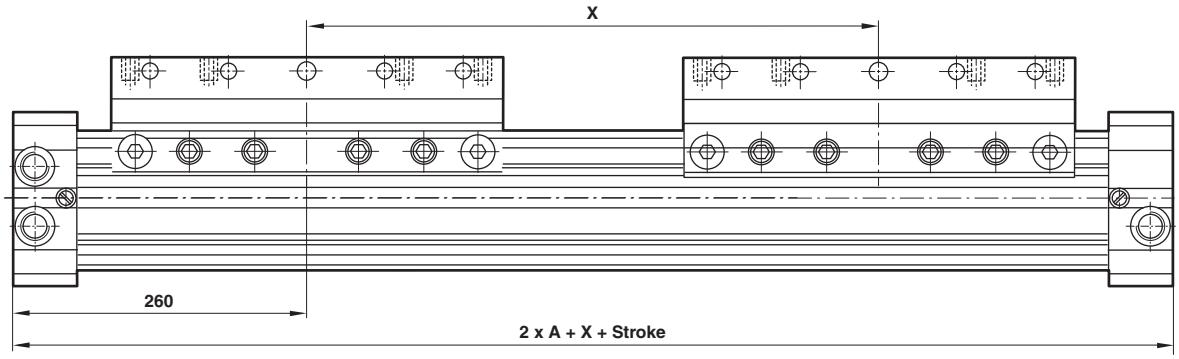

Type	Ø	A	X min.	X max.	Weight at 0 mm	Weight per 100 mm
C/146180/D	80	10.53 (260)	15.4 (390)	19.7 (500)	35 lbs. (15.90 kg)	3.3 lbs. (1.50 kg)

NORGREN
ENGINEERING ADVANTAGE

Cylinder with precision roller guide

C/146200 cylinder ø 25 to 63 mm

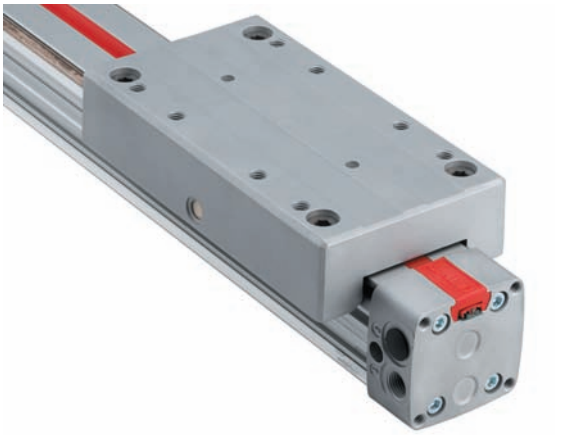

C/146200 – cylinder with precision roller guide (ø 25 to 63 mm)

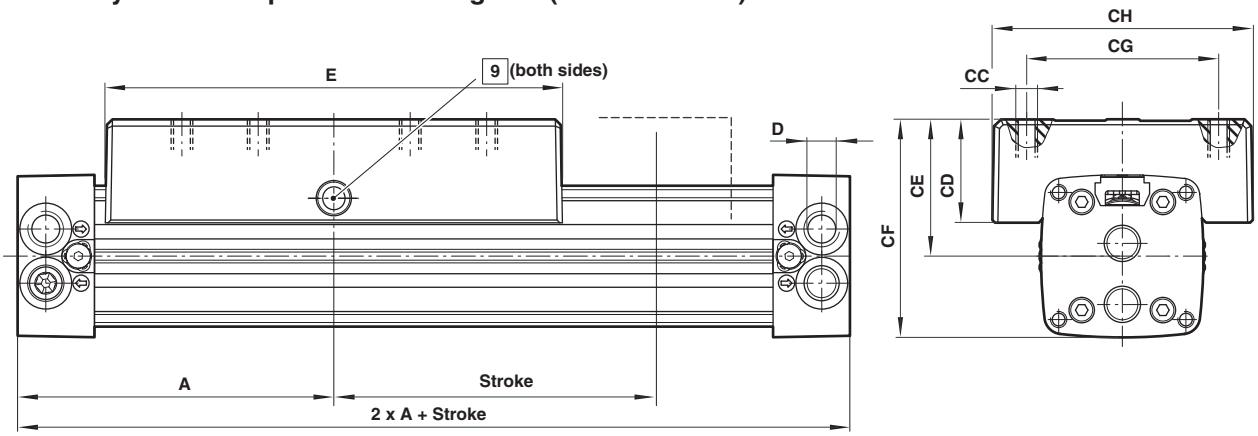

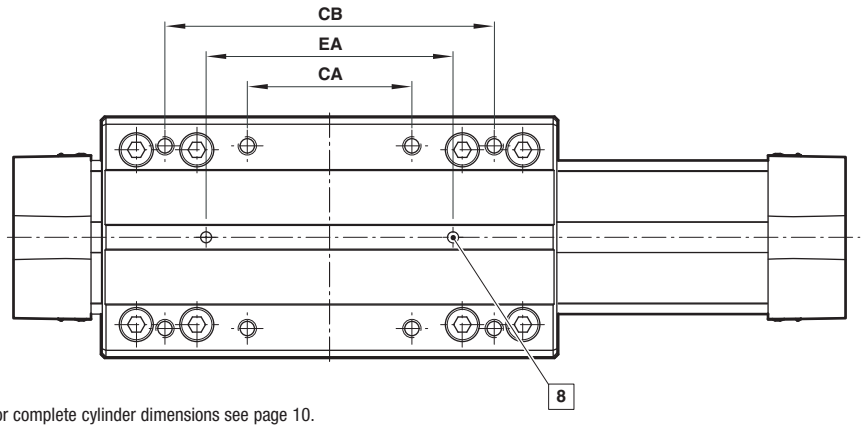

8 Center bore Ø 6 H7. 4 deep

9 For lubrication

For complete cylinder dimensions see page 10.

Type	Ø	A	CA	CB	CC	CD	CE	CF	CG	CH	D	E	EA ±0.05	Weight at 0 mm	Weight per 100 mm
C/146225/...	25	3.94	1.77	3.54	M6-14*	1.42	1.65	2.60	2.36	3.35	1/8 NPT	5.91	2.76	3.3 lbs.	0.44 lbs.
		(100)	(45)	(90)	M6-14*	(36)	(42)	(66)	(60)	(85)	G1/8	(150)	(70)	1.50 kg	0.20 kg
C/146232/...	32	4.72	2.36	4.72	M8-16*	1.50	1.97	3.15	2.95	3.86	1/4 NPT	7.09	3.54	6 lbs.	0.88 lbs.
		(120)	(60)	(120)	M8-16*	(38)	(50)	(80)	(75)	(98)	G1/4	(180)	(90)	2.80 kg	0.40 kg
C/146240/...	40	5.91	3.15	5.91	M8-16*	1.65	2.26	3.74	3.62	4.65	1/4 NPT	8.46	4.53	10 lbs.	1 lbs.
		(150)	(80)	(150)	M8-16*	(42)	(57.5)	(95)	(92)	(118)	G1/4	(215)	(115)	4.50 kg	0.45 kg
C/146250/...	50	7.09	3.54	7.09	M10-20*	1.73	2.64	4.39	3.94	5.20	3/8 NPT	9.84	5.31	18 lbs.	2 lbs.
		(180)	(90)	(180)	M10-20*	(44)	(67)	(111.5)	(100)	(132)	G3/8	(250)	(135)	8.20 kg	0.90 kg
C/146263/...	63	8.46	4.72	9.45	M10-20*	1.85	2.93	5.00	4.33	5.51	1/2 NPT	12.60	7.87	28 lbs.	2.2 lbs.
		(215)	(120)	(240)	M10-20*	(47)	(74.5)	(127)	(110)	(140)	G1/2	(320)	(200)	12.50 kg	1.00 kg

Norgren.com/usa – 303.794.2611 – help@amer.norgren.com

Cylinder with precision roller guide and double carriages

C/146200/MD
ø 25 to 63 mm

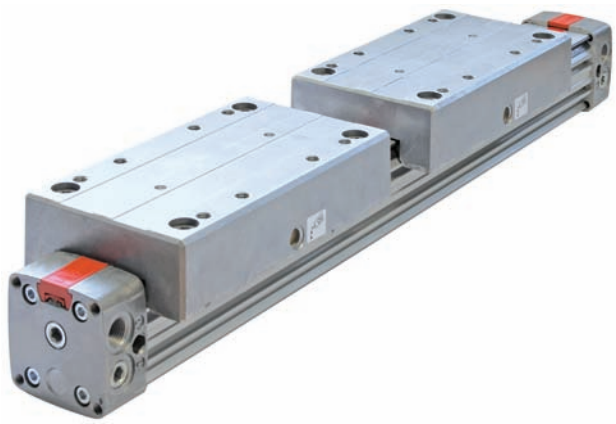

C/146200/MD – cylinder with precision roller guide and double carriages

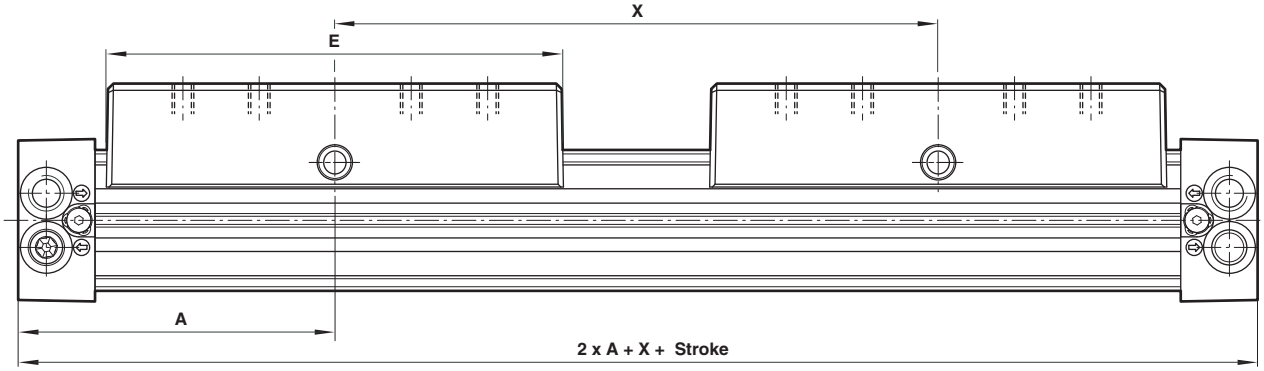

Type	Ø	A	E	X min.	X max.	Weight at 0 mm	Weight per 100 mm
C/146225/MD/...	25	3.94	5.91	5.91	19.69	5.7 lbs.	0.44 lbs.
		(100)	(150)	(150)	(500)	2.60 kg	0.20 kg
C/146232/MD/...	32	4.72	7.09	7.09	19.69	9.3 lbs.	0.88 lbs.
		(120)	(180)	(180)	(500)	4.20 kg	0.40 kg
C/146240/MD/...	40	5.91	8.46	8.46	19.69	15 lbs.	1 lbs.
		(150)	(215)	(215)	(500)	7.00 kg	0.45 kg
C/146250/MD/...	50	7.09	9.84	9.84	19.69	24 lbs.	2 lbs.
		(180)	(250)	(250)	(500)	11.1 kg	0.90 kg
C/146263/MD/...	63	8.46	12.60	12.60	19.69	45 lbs.	2.2 lbs.
		(215)	(320)	(320)	(500)	20.6 kg	1.00 kg

NORGREN
ENGINEERING ADVANTAGE

Cylinder with active brake

C/146000/L3
ø 25 to 63 mm

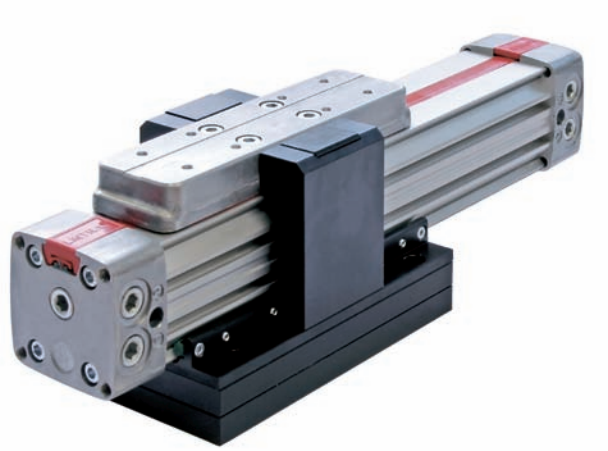

C/146000/L3 – cylinder with active brake (ø 25 ... 63 mm)

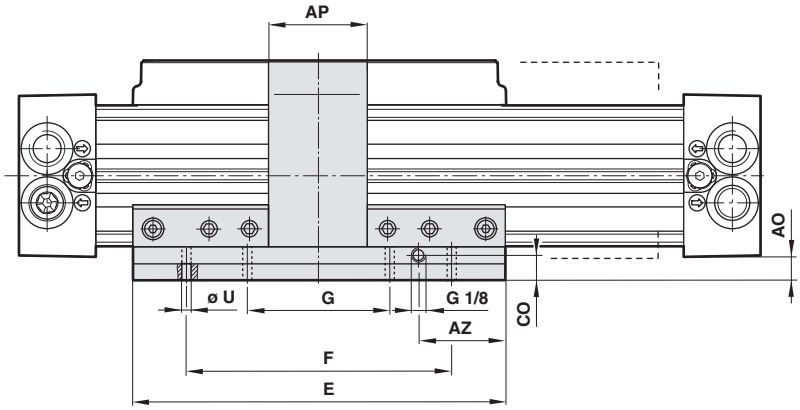

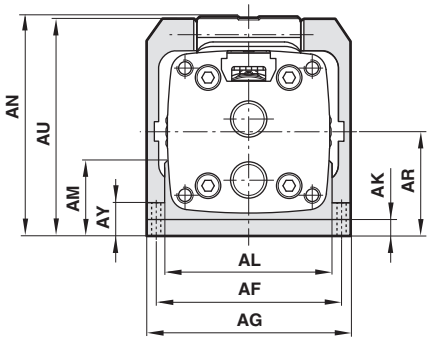

Type	Ø	AF	AG	AK	AL	AM	AN	AO	AP	AR	AU	AY	AZ	CO	E	F	G	Ø U	Weight at 0 mm	Weight per 100 mm
C/146025/L3	25	2.44	2.95	0.47	2.05	1.12	2.89	0.53	1.77	1.48	2.87	0.65	1.18	0.24	5.12	3.54	1.77	0.26	3.5 lbs.	0.44 lbs.
		(62)	(75)	(12)	(52)	(28.5)	(73.5)	(13.5)	(45)	(37.5)	(73)	(16.5)	(30)	(6)	(130)	(90)	(45)	(6.6)	1.60 kg	0.2 kg
C/146032/L3	32	3.07	3.62	0.47	2.52	1.14	3.54	0.55	2.17	1.73	3.52	0.69	1.28	0.24	6.30	4.72	2.36	0.35	5.5 lbs.	0.75 lbs.
		(78)	(92)	(12)	(64)	(29)	(90)	(14)	(55)	(44)	(89.5)	(17.5)	(32.5)	(6)	(160)	(120)	(60)	(9)	2.50 kg	0.35 kg
C/146040/L3	40	3.70	4.41	0.47	3.19	1.36	4.07	0.53	2.56	2.01	4.06	0.71	2.07	0.24	8.46	6.30	3.15	0.35	9.3 lbs.	1.1 lbs.
		(94)	(112)	(12)	(81)	(34.5)	(103.5)	(13.5)	(65)	(51)	(103)	(18)	(52.5)	(6)	(215)	(160)	(80)	(9)	4.20 kg	0.50 kg
C/146050/L3	50	4.41	5.20	0.47	3.70	1.40	4.90	0.57	2.95	2.34	4.88	0.73	2.56	0.24	9.84	7.48	3.74	0.43	15 lbs.	1.7 lbs.
		(112)	(132)	(12)	(94)	(35.5)	(124.5)	(14.5)	(75)	(59.5)	(124)	(18.5)	(65)	(6)	(250)	(190)	(95)	(11)	6.90 kg	0.75 kg
C/146063/L3	63	4.45	5.91	0.47	4.41	1.67	5.53	0.61	3.54	2.68	5.51	0.81	4.53	0.24	12.60	9.45	4.72	0.51	25 lbs.	2.2 lbs.
		(113)	(150)	(12)	(112)	(42.5)	(140.5)	(15.5)	(90)	(68)	(140)	(20.5)	(115)	(6)	(320)	(240)	(120)	(13)	11.5 kg	1.0 kg

Norgren.com/usa – 303.794.2611 – help@amer.norgren.com

C/146200/L3 – cylinder with precision roller guide and active brake (ø 25 ... 63 mm)

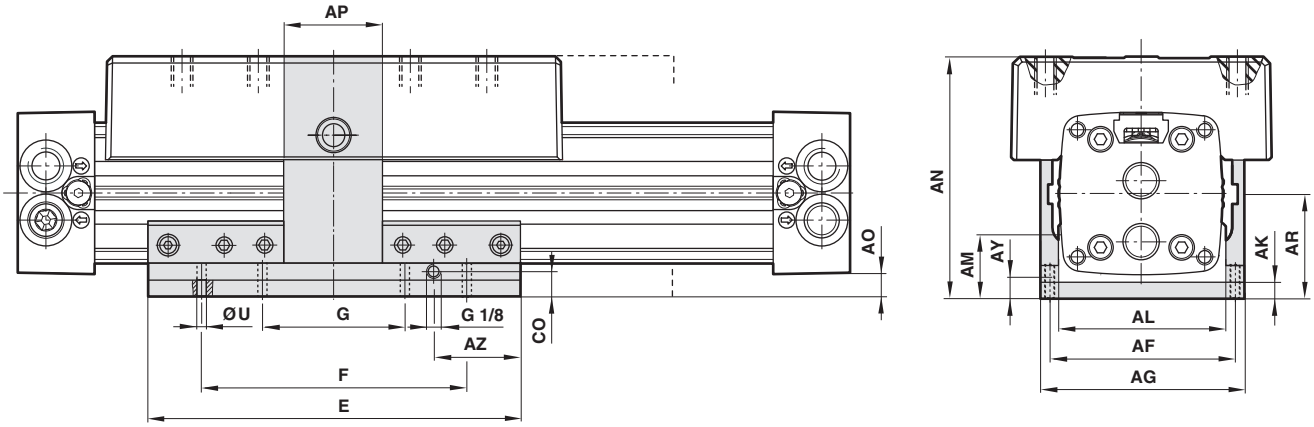

Missing cylinder dimensions see pages 10 and 13.

Type	Ø	AF	AG	AK	AL	AM	AN	AO	AP	AR	AU	AY	AZ	CO	E	F	G	Ø U	Weight at 0 mm	Weight per 100 mm
C/146225/L3	25	2.44	2.95	0.47	2.05	1.12	3.13	0.53	1.57	1.48	2.87	0.65	1.18	0.24	5.12	3.54	1.77	0.26	3.4 lbs.	0.44 lbs.
		(62)	(75)	(12)	(52)	(28.5)	(79.5)	(13.5)	(40)	(37.5)	(73)	(16.5)	(30)	(6)	(130)	(90)	(45)	(6.6)	1.55 kg	0.2 kg
C/146232/L3	32	3.07	3.62	0.47	2.52	1.14	3.70	0.55	2.17	1.73	3.52	0.69	1.28	0.24	6.30	4.72	2.36	0.35	8.6 lbs.	0.75 lbs.
		(78)	(92)	(12)	(64)	(29)	(94)	(14)	(55)	(44)	(89.5)	(17.5)	(32.5)	(6)	(160)	(120)	(60)	(9)	3.90 kg	0.35 kg
C/146240/L3	40	3.70	4.41	0.47	3.19	1.36	4.27	0.53	2.56	2.01	4.06	0.71	2.07	0.24	8.46	6.30	3.15	0.35	13.7 lbs.	1.1 lbs.
		(94)	(112)	(12)	(81)	(34.5)	(108.5)	(13.5)	(65)	(51)	(103)	(18)	(52.5)	(6)	(215)	(160)	(80)	(9)	6.20 kg	0.50 kg
C/146250/L3	50	4.41	5.20	0.47	3.70	1.40	4.98	0.57	2.95	2.34	4.88	0.73	2.56	0.24	9.84	7.48	3.74	0.43	23.6 lbs.	1.7 lbs.
		(112)	(132)	(12)	(94)	(35.5)	(126.5)	(14.5)	(75)	(59.5)	(124)	(18.5)	(65)	(6)	(250)	(190)	(95)	(11)	10.70 kg	0.75 kg
C/146263/L3	63	5.20	5.91	0.47	4.41	1.67	5.61	0.61	3.15	2.68	5.51	0.81	4.53	0.24	12.60	9.45	4.72	0.51	25.4 lbs.	2.2 lbs.
		(132)	(150)	(12)	(112)	(42.5)	(142.5)	(15.5)	(80)	(68)	(140)	(20.5)	(115)	(6)	(320)	(240)	(120)	(13)	11.50 kg	1.00 kg

Theoretical forces, air consumption, cushioning length, holding forces for active brake

Cylinder Ø mm	Theoretical forces lbf (N) at 87 psi (6 bar)	Air consumption ft^3/in. (l/cm) of stroke at 87 psi (6 bar)	Cushioning length inches (mm)	Holding forces lbf. (N) of brake (on dry braking surface) active (L3) at 87 psi (6 bar)
25	66 (294)	0.003 (0.035)	1 (26)	112 (5000
32	108 (482)	0.005 (0.056)	1.4 (35)	202 (900)
40	170 (754)	0.008 (0.088)	2 (50)	337 (1500)
50	265 (1178)	0.012 (0.137)	2.3 (60)	562 (2500)
63	420 (1870)	0.02 (0.218)	2.8 (70)	899 (4000)

NORGREN
ENGINEERING ADVANTAGE

Cylinder with passive brake

C/146000/L4

ø 25 to 63 mm

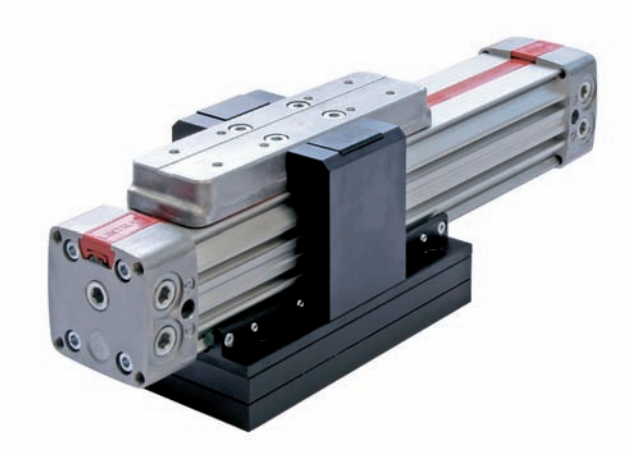

C/146000/L4 – cylinder with passive brake (ø 25 ... 63 mm)

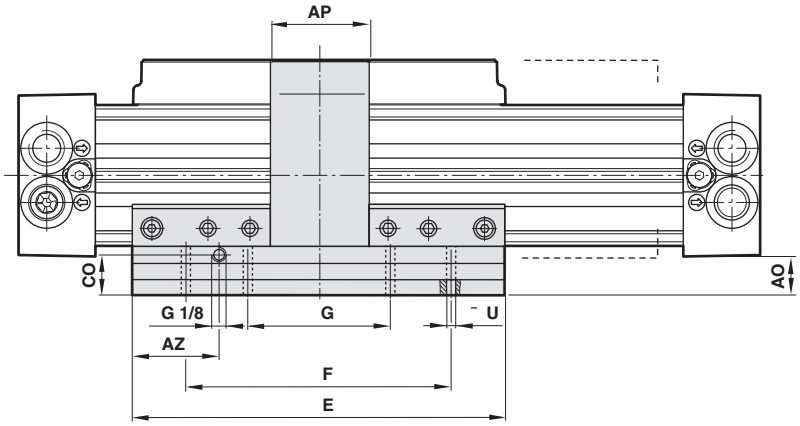

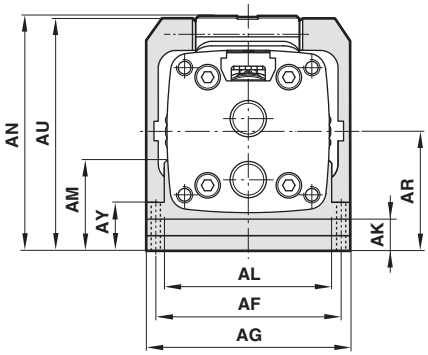

Type	Ø	AF	AG	AK	AL	AM	AN	AO	AP	AR	AU	AY	AZ	CO	E	F	G	Ø U	Weight at 0 mm	Weight per 100 mm
C/146025/L4	25	2.44	2.95	0.87	2.05	1.52	3.29	0.93	1.77	1.87	3.27	1.04	1.18	0.63	5.12	3.54	1.77	0.26	4.2 lbs.	0.44 lbs.
		(62)	(75)	(22)	(52)	(38.5)	(83.5)	(23.5)	(45)	(47.5)	(83)	(26.5)	(30)	(16)	(130)	(90)	(45)	(6.6)	1.90 kg	0.2 kg
C/146032/L4	32	3.07	3.62	0.94	2.52	1.61	4.02	1.02	2.17	2.20	4.00	1.16	1.28	0.71	6.30	4.72	2.36	0.35	5.7 lbs.	0.77 lbs.
		(78)	(92)	(24)	(64)	(41)	(102)	(26)	(55)	(56)	(101.5)	(29.5)	(32.5)	(18)	(160)	(120)	(60)	(9)	2.60 kg	0.35 kg
C/146040/L4	40	3.70	4.41	0.94	3.19	1.83	4.55	1.00	2.56	2.48	4.53	1.18	2.07	0.71	8.46	6.30	3.15	0.35	10.4 lbs.	1.1 lbs.
		(94)	(112)	(24)	(81)	(46.5)	(115.5)	(25.5)	(65)	(63)	(115)	(30)	(52.5)	(18)	(215)	(160)	(80)	(9)	4.70 kg	0.50 kg
C/146050/L4	50	4.41	5.20	1.18	3.70	2.11	5.61	1.28	2.95	3.05	5.59	1.44	2.56	0.94	9.84	7.48	3.74	0.43	15.9 lbs.	1.7 lbs.
		(112)	(132)	(30)	(94)	(53.5)	(142.5)	(32.5)	(75)	(77.5)	(142)	(36.5)	(65)	(24)	(250)	(190)	(95)	(11)	7.20 kg	0.75 kg
C/146063/L4	63	5.20	5.91	1.18	4.41	2.38	6.24	1.32	3.54	3.39	6.22	1.52	4.53	1.65	12.60	9.45	4.72	0.51	27.3 lbs.	2.2 lbs.
		(132)	(150)	(30)	(112)	(60.5)	(158.5)	(33.5)	(90)	(86)	(158)	(38.5)	(115)	(42)	(320)	(240)	(120)	(13)	12.40 kg	1.0 kg

Norgren.com/usa – 303.794.2611 – help@amer.norgren.com

C/146200/L4 – cylinder with precision roller guide and passive brake (ø 25 ... 63 mm)

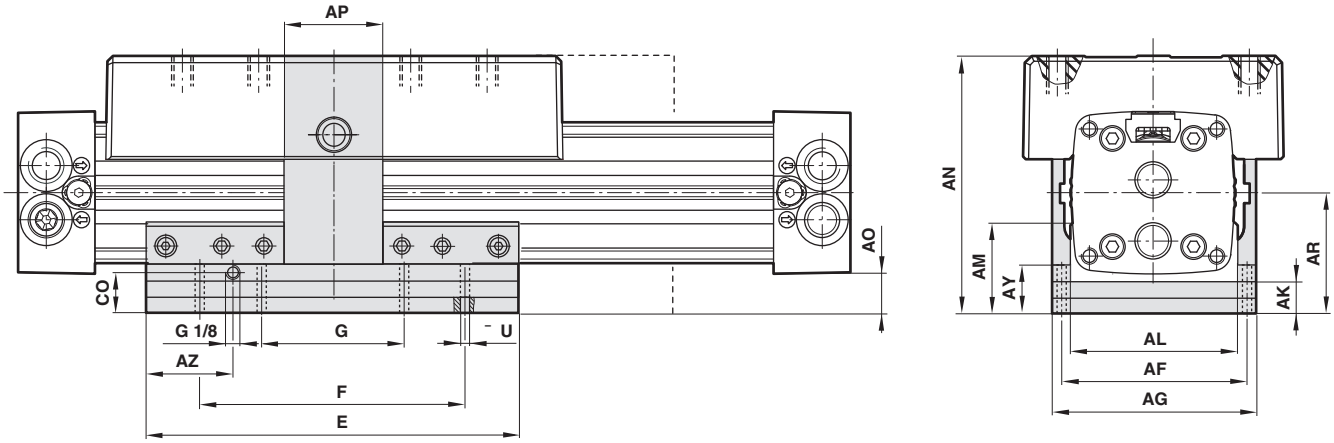

Type	Ø	AF	AG	AK	AL	AM	AN	AO	AP	AR	AU	AY	AZ	CO	E	F	G	Ø U	Weight at 0 mm	Weight per 100 mm
C/146225/L4	25	2.44	2.95	0.87	2.05	1.52	3.52	0.93	1.57	1.87	3.27	1.04	1.18	0.63	5.12	3.54	1.77	0.26	4.2 lbs.	0.44 lbs.
		(62)	(75)	(22)	(52)	(38.5)	(89.5)	(23.5)	(40)	(47.5)	(83)	(26.5)	(30)	(16)	(130)	(90)	(45)	(6.6)	1.90 kg	0.20 kg
C/146232/L4	32	3.07	3.62	0.94	2.52	1.61	4.17	1.02	2.17	2.20	4.00	1.16	1.28	0.71	6.30	4.72	2.36	0.35	8.8 lbs.	0.77 lbs.
		(78)	(92)	(24)	(64)	(41)	(106)	(26)	(55)	(56)	(101.5)	(29.5)	(32.5)	(18)	(160)	(120)	(60)	(9)	4.00 kg	0.35 kg
C/146240/L4	40	3.70	4.41	0.94	3.19	1.83	4.74	1.00	2.56	2.48	4.53	1.18	2.07	0.71	8.46	6.30	3.15	0.35	14.8 lbs.	1.1 lbs.
		(94)	(112)	(24)	(81)	(46.5)	(120.5)	(25.5)	(65)	(63)	(115)	(30)	(52.5)	(18)	(215)	(160)	(80)	(9)	6.70 kg	0.50 kg
C/146250/L4	50	4.41	5.20	1.18	3.70	2.11	5.69	1.28	2.95	3.05	5.59	1.44	2.56	0.94	9.84	7.48	3.74	0.43	24 lbs.	1.7 lbs.
		(112)	(132)	(30)	(94)	(53.5)	(144.5)	(32.5)	(75)	(77.5)	(142)	(36.5)	(65)	(24)	(250)	(190)	(95)	(11)	11.00 kg	0.75 kg
C/146263/L4	63	5.20	5.91	1.18	4.41	2.38	6.32	1.32	3.15	3.39	6.22	1.52	4.53	0.94	12.60	9.45	4.72	0.51	27 lbs.	2.2 lbs.
		(132)	(150)	(30)	(112)	(60.5)	(160.5)	(33.5)	(80)	(86)	(158)	(38.5)	(115)	(24)	(320)	(240)	(120)	(13)	12.40 kg	1.00 kg

Theoretical forces, air consumption, cushioning length, holding forces for passive brake

Cylinder Ø mm	Theoretical forces lbf (N) at 87 psi (6 bar)	Air consumption ft^3/in. (l/cm) of stroke at 87 psi (6 bar)	Cushioning length inches (mm)	Holding forces lbf. (N) of brake (on dry braking surface) passive (L4)
25	66 (294)	0.003 (0.035)	1 (26)	50 (220)
32	108 (482)	0.005 (0.056)	1.4 (35)	84 (375)
40	170 (754)	0.008 (0.088)	2 (50)	141 (630)
50	265 (1178)	0.012 (0.137)	2.3 (60)	225 (1000)
63	420 (1870)	0.02 (0.218)	2.8 (70)	371 (1650)

NORGREN ENGINEERING ADVANTAGE

C/146000, C/146100, C/146200

Mountings (ø 16 ... 80 mm)
Foot mounting C
QM/1460XX/21

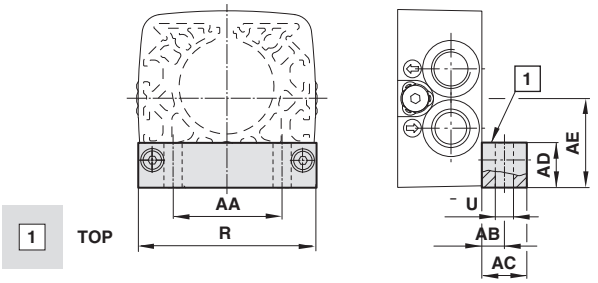

Type*	Ø	AA	AB	AC	AD	AE	R	Ø U	Wt.
QM/146016/21	16	0.63	0.39	0.59	0.12	0.63	1.06	0.22	0.03 lbs.
		(16)	(10)	(15)	(3)	(16)	(27)	(5.5)	0.01 kg.
QM/146020/21	20	0.67	0.20	0.39	0.39	0.85	1.57	0.22	0.06 lbs.
		(17)	(5)	(10)	(10)	(21.5)	(40)	(5.5)	0.03 kg.
QM/146025/21	25	0.71	0.28	0.59	0.53	0.94	1.89	0.28	0.22 lbs.
		(18)	(7)	(15)	(13.5)	(24) (26.5)	(48)	(7)	0.1 kg.
QM/146032/21	32	1.02	0.43	0.87	0.65	1.20	2.36	0.35	0.22 lbs.
		(26)	(11)	(22)	(16.5)	(30.5) (33)	(60)	(9)	0.1 kg.
QM/146040/21	40	1.18	0.43	0.87	0.77	1.48	2.95	0.35	0.44 lbs.
		(30)	(11)	(22)	(19.5)	(37.5) (40.5)	(75)	(9)	0.2 kg.
QM/146050/21	50	1.65	0.47	0.98	0.94	1.77	3.54	0.43	0.66 lbs.
		(42)	(12)	(25)	(24)	(45) (49)	(90)	(11)	0.3 kg.
QM/146063/21	63	1.89	0.51	0.98	1.08	2.13	4.13	0.51	0.88 lbs.
		(48)	(13)	(25)	(27.5)	(54) (57.5)	(105)	(13)	0.4 kg.
QM/146080/21	80	2.52	0.49	0.98	1.38	2.76	5.12	0.55	0.88 lbs.
		(64)	(12.5)	(25)	(35)	(70)	(130)	(14)	0.4 kg.

Attention: When Foot mounts are used with a Center support mounting the word **TOP** should be visible on the top face of the mount. This will change the "AE" dimension as shown below.

Type*	Ø	AE
QM/146025/21	25	1.04
		(26.5)
QM/146032/21	32	1.30
		(33)
QM/146040/21	40	1.59
		(40.5)
QM/146050/21	50	1.93
		(49)
QM/146063/21	63	2.26
		(57.5)

* Each part number includes (2) foot mount brackets.

Center support V
QM/1460XX/32

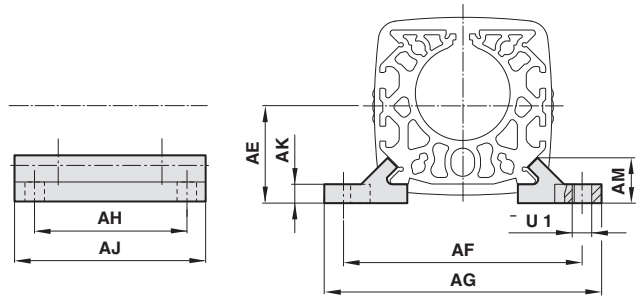

Type**	Ø	AE	AF	AG	AH	AJ	AK	AM	Ø U1	Wt.
QM/146016/32	16	0.63	1.57	1.97	0.79	1.18	0.14	0.35	0.22	0.03 lbs.
		(16)	(40)	(50)	(20)	(30)	(3.5)	(9)	(5.5)	0.01 kg.
QM/146020/32	20	0.85	2.05	2.44	1.77	2.36	0.18	0.47	0.22	0.07 lbs.
		(21.5)	(52)	(62)	(45)	(60)	(4.5)	(12)	(5.5)	0.03 kg.
QM/146025/32	25	1.04	2.36	2.83	2.36	3.15	0.22	0.51	0.26	0.09 lbs.
		(26.5)	(60)	(72)	(60)	(80)	(5.5)	(13)	(6.6)	0.04 kg.
QM/146032/32	32	1.20	2.99	3.62	2.76	3.94	0.26	0.53	0.35	0.16 lbs.
		(30.5)	(76)	(92)	(70)	(100)	(6.5)	(13.5)	(9)	0.07 kg.
QM./146040/32	40	1.48	3.62	4.25	3.54	4.72	0.30	0.73	0.35	0.44 lbs.
		(37.5)	(92)	(108)	(90)	(120)	(7.5)	(18.5)	(9)	0.2 kg.
QM/146050/32	50	1.77	4.33	5.04	4.33	5.51	0.30	0.73	0.43	0.44 lbs.
		(45)	(110)	(128)	(110)	(140)	(7.5)	(18.5)	(11)	0.2 kg.
QM/146063/32	63	2.13	5.20	6.06	4.72	6.30	0.35	0.98	0.51	0.66 lbs.
		(54)	(132)	(154)	(120)	(160)	(9)	(25)	(13)	0.3 kg.
QM/146080/32	80	2.76	6.10	7.09	5.51	7.09	0.47	1.11	0.55	0.88 lbs.
		(70)	(155)	(180)	(140)	(180)	(12)	(28.3)	(14)	0.4 kg.

** Each part number includes left and right support brackets.

Groove key for carriage

Type	Ø	A	B	C	D	E	Weight
M/P74065	25	0.16	M5	0.47	0.17	0.31	0.02 lbs.
		(4)	M5	(12)	(4.25)	(8)	0.01 kg.
M/P74065	32	0.16	M5	0.47	0.17	0.31	0.02 lbs.
		(4)	M5	(12)	(4.25)	(8)	0.01 kg.
M/P74066	40	0.18	M6	0.67	0.25	0.41	0.04 lbs.
		(4.5)	M6	(17)	(6.25)	(10.5)	0.02 kg.
M/P41858	50	0.30	M8	0.91	0.30	0.53	0.07 lbs.
		(7.5)	M8	(23)	(7.5)	(13.5)	0.03 kg.
M/P41858	63	0.30	M8	0.91	0.30	0.53	0.07 lbs.
		(7.5)	M8	(23)	(7.5)	(13.5)	0.03 kg.

Groove key for profile barrel

Type	Ø	A	B	C	D	E	Weight
M/P74065	25 - 63	0.16	M5	0.47	0.17	0.31	0.02 lbs.
		(4)	M5	(12)	(4.25)	(8)	0.01 kg.

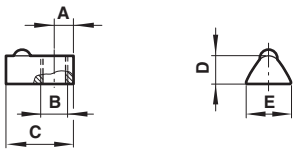

C/146000, C/146100, C/146200

Carriage plate mounting UV

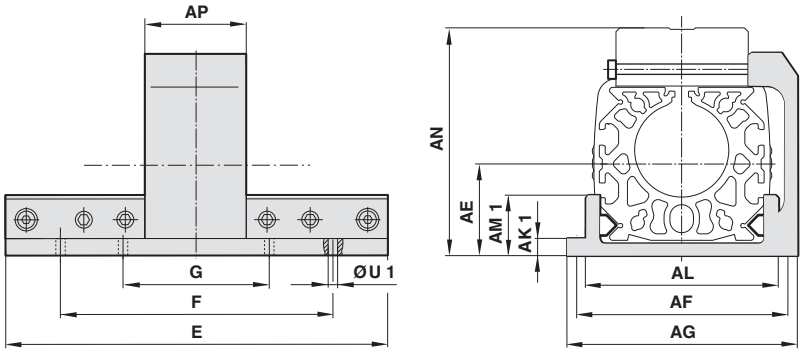

Type	Ø	AE	AF	AG	AK1	AL	AM1	AN	AP	E	F	G	ØU1	Wt
QM/146016/34	16	0.63	1.57	1.97	0.14	1.22	0.33	1.59	1.18	3.15	2.36		0.22	0.22 lbs.
		(16)	(40)	(50)	(3.5)	(31)	(8.5)	(40.5)	(30)	(80)	(60)	–	(5.5)	0.1 kg.
QM/146020/34	20	0.85	2.05	2.44	0.22	1.65	0.57	2.20	1.42	4.33	3.15	1.57	0.22	0.44 lbs.
		(21.5)	(52)	(62)	(5.5)	(42)	(14.5)	(56)	(36)	(110)	(80)	(40)	(5.5)	0.2 kg.
QM/146025/34	25	1.04	2.36	2.95	0.22	2.05	0.69	2.46	1.77	5.12	3.54	1.77	0.26	0.66 lbs.
		(26.5)	(60)	(75)	(5.5)	(52)	(17.5)	(62.5)	(45)	(130)	(90)	(45)	(6.6)	0.3 kg.
QM/146032/34	32	1.30	3.07	3.62	0.26	2.52	0.71	3.11	2.17	6.30	4.72	2.36	0.35	0.88 lbs.
		(33)	(78)	(92)	(6.5)	(64)	(18)	(79)	(55)	(160)	(120)	(60)	(9)	0.4 kg.
QM/146040/34	40	1.59	3.70	4.41	0.30	3.19	0.94	3.66	2.56	8.46	6.30	3.15	0.35	1.76 lbs.
		(40.5)	(94)	(112)	(7.5)	(81)	(24)	(93)	(65)	(215)	(160)	(80)	(9)	0.8 kg.
QM/146050/34	50	1.93	4.41	5.20	0.31	3.70	0.98	4.49	2.95	9.84	7.48	3.74	0.43	2.5 lbs.
		(49)	(112)	(132)	(8)	(94)	(25)	(114)	(75)	(250)	(190)	(95)	(11)	1.2 kg.
QM/146063/34	63	2.26	5.20	5.91	0.39	4.41	1.26	5.12	3.54	12.60	9.45	4.72	0.51	4.4 lbs.
		(57.5)	(132)	(150)	(10)	(112)	(32)	(130)	(90)	(320)	(240)	(120)	(13)	2 kg.
QM/146080/34	80	2.76	6.10	7.09	0.39	5.20	1.26	6.26	3.94	15.35	11.81	5.91	0.55	6.4 lbs.
		(70)	(155)	(180)	(10)	(132)	(32)	(159)	(100)	(390)	(300)	(150)	(14)	2.9 kg.

Swinging bridge S
QM/1460XX/37

For cylinders with internal guiding only

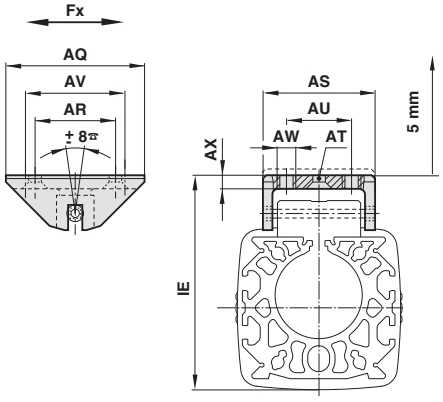

Type	Ø	AQ	AR	AS	AT	AU	AV	AW	AX	IE	Fx (N)	Wt.
QM/146016/37	16	1.57	–	1.02	–	0.47	1.18	M4	0.16		22 lbf.	0.04 lbs.
		(40)	–	(26)	–	(12)	(30)	M4	(4)	48+4	100 N	0.02 kg.
QM/146020/37	20	1.97	1.38	1.50		0.79	1.57	M5	0.20		34 lbf.	0.22 lbs.
		(50)	(35)	(38)	DIN74-Bm5	(20)	(40)	M5	(5)	65.5+5	150 N	0.1 kg.
QM/146025/37	25	2.36	1.57	1.73		0.79	1.77	M5	0.20		56 lbf.	0.44 lbs.
		(60)	(40)	(44)	DIN74-Bm5	(20)	(45)	M5	(5)	70+5	250 N	0.2 kg.
QM/146032/37	32	3.15	1.97	2.32		1.18	2.36	M6	0.22		92 lbf.	0.66 lbs.
		(80)	(50)	(59)	DIN74-Bm6	(30)	(60)	M6	(5.5)	88.5+5	410 N	0.3 kg.
QM/146032/37	40	3.15	1.97	2.32		1.18	2.36	M6	0.22		144 lbf.	0.66 lbs.
		(80)	(50)	(59)	DIN74-Bm6	(30)	(60)	M6	(5.5)	102.5+5	640 N	0.3 kg.
QM/146050/37	50	3.94	2.36	2.56		1.57	3.15	M8	0.26		225 lbf.	1.1 lbs.
		(100)	(60)	(65)	DIN74-Bm8	(40)	(80)	M8	(6.5)	124+5	1000 N	0.5 kg
QM/146050/37	63	3.94	2.36	2.56		1.57	3.15	M8	0.26		337 lbf.	1.1 lbs.
		(100)	(60)	(65)	DIN74-Bm8	(40)	(80)	M8	(6.5)	139+5	1500 N	0.5 kg.
QM/146080/37	80	3.94	2.36	2.56		1.57	3.15	M8	0.26		540 lbf.	1.1 lbs.
		(100)	(60)	(65)	DIN74-Bm8	(40)	(80)	M8	(6.5)	168.5+5	2400 N	0.5 kg.

NORGREN ENGINEERING ADVANTAGE

C/146000, C/146100, C/146200

Secondary carriage W QM/461XX/35
Side mounting plate UW QM/461XX/36

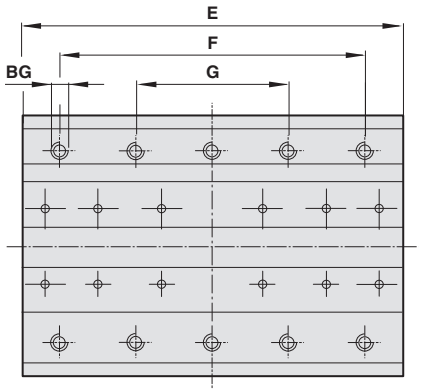

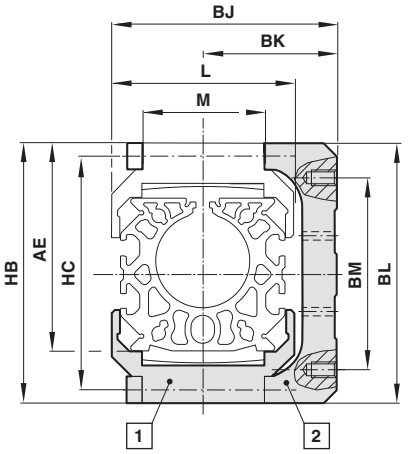

1 Secondary carriage – W
2 Side mounting plate – UW

Type (W)	Type (UW)	Ø	AE	BG	BJ	BK	BL	BM	E	F	G	HB	HC	L	M	W	UW
QM/146120/35	QM/146120/36	20	2.32		2.13	1.30	3.07	2.17	4.33	3.15	1.57	3.11	2.52	1.65	1.06	0.42 lb.	0.55 lbs.
			(59)	M 5 x 10*	(54)	(33)	(78)	(55)	(110)	(80)	(40)	(79)	(64)	(42)	(27)	0.19 kg	0.25 kg
QM/146125/35	QM/146125/36	25	2.66		2.48	1.46	3.39	2.56	5.12	3.54	1.77	3.43	3.03	2.05	1.26	0.60 lbs.	0.73 lbs.
			(67.5)	M 5 x 10*	(63)	(37)	(86)	(65)	(130)	(90)	(45)	(87)	(77)	(52)	(32)	0.27 kg	0.33 kg
QM/146132/35	QM/146132/36	32	3.23		3.03	1.77	4.06	3.15	6.30	4.72	2.36	4.09	3.70	2.52	1.77	1.10 lbs.	1.10 lbs.
			(82)	M 5 x 12*	(77)	(45)	(103)	(80)	(160)	(120)	(60)	(104)	(94)	(64)	(45)	0.50 kg	0.50 kg
QM/146140/35	QM/146140/36	40	3.84		3.03	2.30	4.69	3.54	8.46	6.30	3.15	4.72	4.33	3.11	1.77	1.43 lbs.	2.38 lbs.
			(97.5)	M 6 x 12*	(77)	(58.5)	(119)	(90)	(215)	(160)	(80)	(120)	(110)	(79)	(45)	0.65 kg	1.08 kg
QM/146150/35	QM/146150/36	50	4.61		3.86	2.81	5.63	4.72	9.84	7.48	3.74	5.67	5.16	3.62	1.97	2.43 lbs.	4.08 lbs.
			(117)	M 6 x 15*	(98)	(71.5)	(143)	(120)	(250)	(190)	(95)	(144)	(131)	(92)	(50)	1.10 kg	1.85 kg
QM/146163/35	QM/146163/36	63	5.39		4.63	3.33	7.01	5.51	12.60	9.45	4.72	6.65	6.06	4.33	1.97	4.19 lbs.	7.63 lbs.
			(137)	M 8 x 20*	(117.5)	(84.5)	(178)	(140)	(320)	(240)	(120)	(169)	(154)	(110)	(50)	1.90 kg	3.46 kg

*1 deep

Assembly kit for shock absorber

For cylinder series C/146100/M

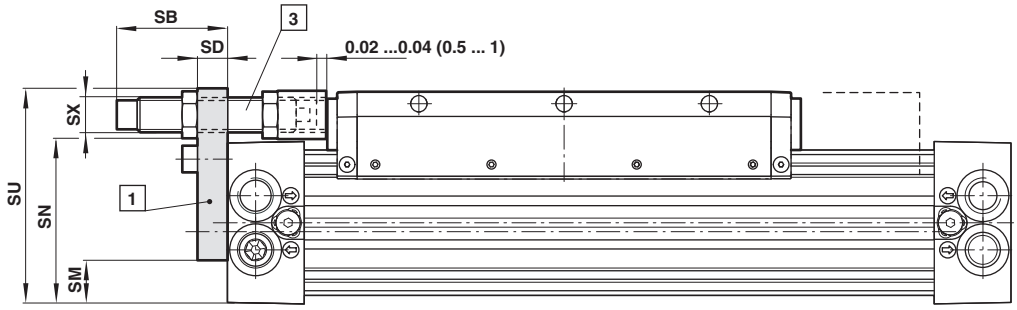

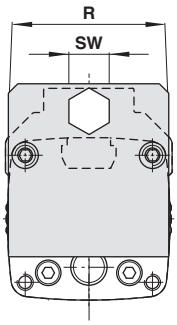

For cylinder series C/146200/M

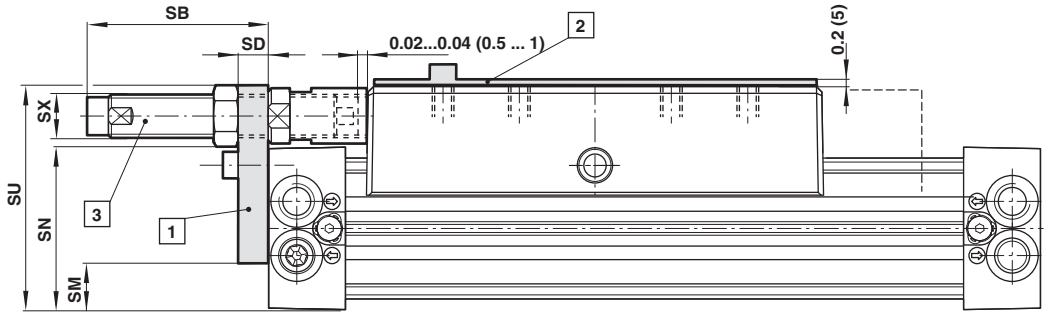

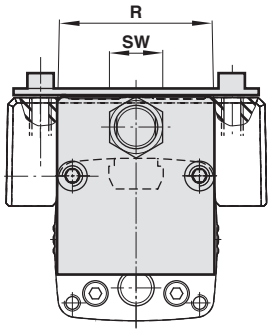

1 **Assembly kit**

2 **Plate ø 40 to 63 mm bores only**

3 **Please order shock absorber separately. see ACE program**

Cylinder External guide	Ø	Assembly kit for shock absorber Position 1	Plate Position 2	R	SB	SD	SC	SM	SN	SU	SW	SX
C/146125	25	QM/146125/67	–	1.89	1.79	0.47	–	0.75	1.93	2.74	0.67	M14x1.5
			–	(48)	(45.5)	(12)	–	(19)	(49)	(69.5)	(17)	M14x1.5
C/146132	32	QM/146132/67	–	2.36	1.59	0.47	–	0.94	2.40	3.21	0.67	M14x1.5
			–	(60)	(40.5)	(12)	–	(24)	(61)	(81.5)	(17)	M14x1.5
C/146140	40	QM/146140/67	–	2.95	3.21	0.59	–	1.14	2.91	4.31	1.18	M25x1.5
			–	(75)	(81.5)	(15)	–	(29)	(74)	(109.5)	(30)	M25x1.5
C/146150	50	QM/146150/67	–	3.54	2.72	0.59	–	1.30	3.58	5.02	1.18	M25x1.5
			–	(90)	(69)	(15)	–	(33)	(91)	(127.5)	(30)	M25x1.5
C/146163	63	QM/146163/67	–	4.13	2.72	0.59	–	1.61	4.15	5.57	1.18	M25x1.5
			–	(105)	(69)	(15)	–	(41)	(105.5)	(141.5)	(30)	M25x1.5
C/146180	80	QM/146180/67	–	5.12	3.35	0.79	–	2.09	5.14	6.83	1.57	M33x1.5
			–	(130)	(85)	(20)	–	(53)	(130.5)	(173.5)	Ø (40)	M33x1.5
Cylinder Roller guide	**Ø**	**Assembly kit for shock absorber Position 1**	**Plate Position 2**	**R**	**SB**	**SD**	**SC**	**SM**	**SN**	**SU**	**SW**	**SX**
C/146225	25	QM/146125/67	–	1.89	1.79	0.47	–	0.75	1.93	2.74	0.67	M14x1.5
			–	(48)	(45.5)	(12)	–	(19)	(49)	(69.5)	(17)	M14x1.5
C/146232	32	QM/146132/67	–	2.36	1.59	0.47	–	0.94	2.40	3.21	0.67	M14x1.5
			–	(60)	(40.5)	(12)	–	(24)	(61)	(81.5)	(17)	M14x1.5
C/146240	40	QM/146140/67	M/P41434	2.95	3.21	0.59	1.22	1.14	2.91	4.31	1.18	M25x1.5
			–	(75)	(81.5)	(15)	(31)	(29)	(74)	(109.5)	(30)	M25x1.5
C/146250	50	QM/146150/67	M/P41435	4.13	2.72	0.59	1.42	1.30	3.58	5.02	1.18	M25x1.5
			–	(105)	(69)	(15)	(36)	(33)	(91)	(127.5)	(30)	M25x1.5
C/146263	63	QM/146163/67	M/P41436	5.12	2.72	0.59	1.38	1.61	4.15	5.57	1.18	M25x1.5
			–	(130)	(69)	(15)	(35)	(41)	(105.5)	(141.5)	(30)	M25x1.5

Please order shock absorber and plate separately.

Attention: When using M/146200 cylinders (Ø 40 to 63 mm) an extra top plate must be mounted onto the carriage as the center line of the shock absorbers has to be within the surface of the carriage.

Additional LINTRA PLUS Solutions

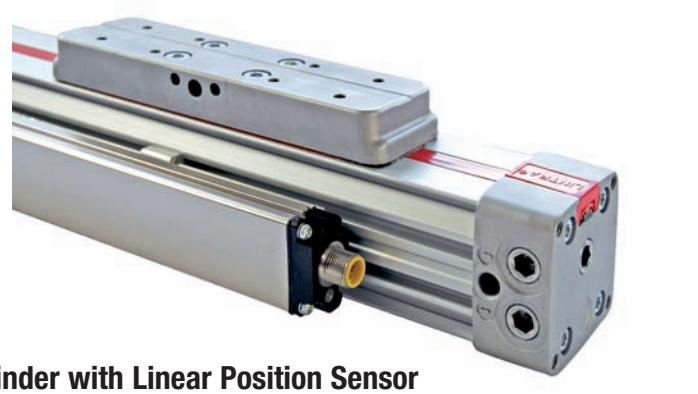

Cylinder with Linear Position Sensor
C/146...00/F1
32 mm - 63 mm bore
» Linear position sensor for continuous sensing of cylinder position
» Low profile package for easy system integration

Adjustable Stop Assembly Kit
(with shock absorber option)
For C/146100 and C/146200 (25 mm - 40 mm bore)
» Flexible assembly kit allows stroke adjustment from either end of the cylinder
» Integral with option for a shock absorber for impact dampening

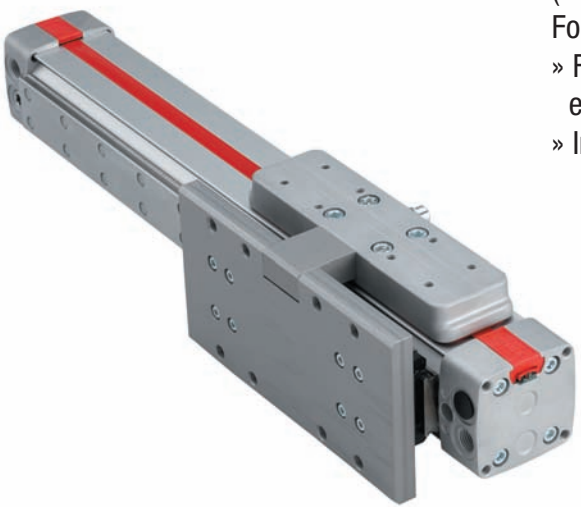

Cylinder with added Caged Ball Linear Motion Guide
For C/146200/PM
25 mm - 63 mm
» A bolt-on guiding system for greater accuracy and higher loads.
» Flexible mounting kit allows integration of customer preferred guiding system

C/146000, C/146100, C/146200

Spares Kits for cylinders with NPT ports and stroke in inches

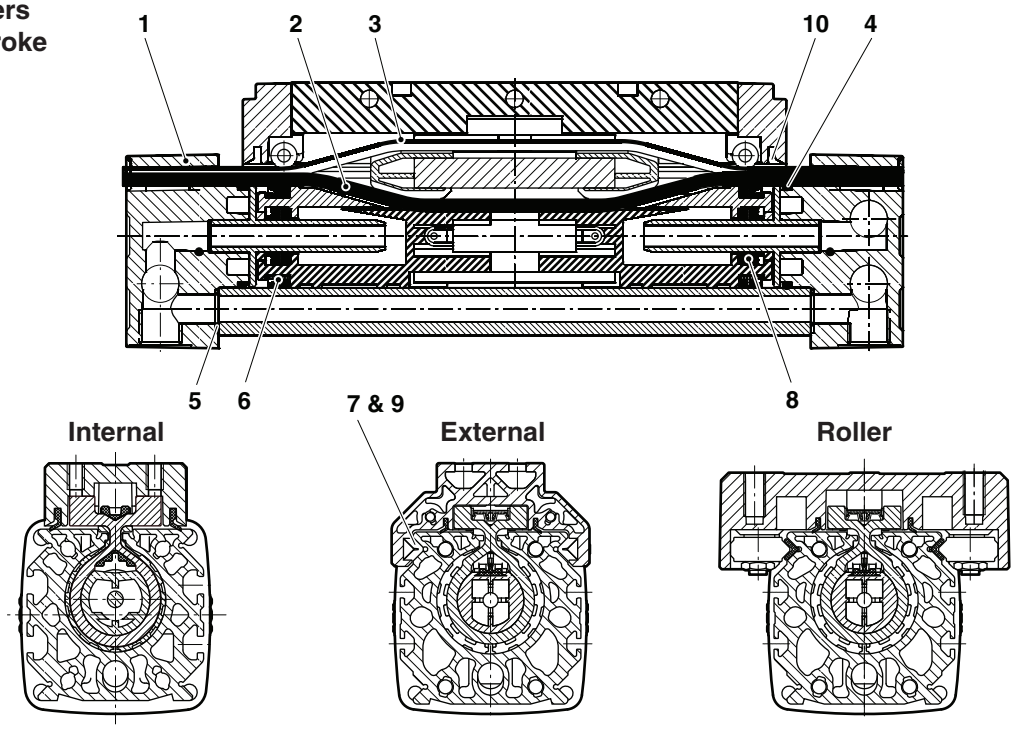

For C/146000. .../M. C/146200. .../M Internally and Roller guided models

Ø	Type	NPT spares kit	Spares kit w/seal and cover strip	Comprising Item	Description	Quantity	Seal strip Item 2	Cover strip Item 3
20	C/146020..../M	QM/146020/00	QC/146020/88/*	1	Clamping lever (ø 25 ... 63)	2	C/P 40262/*	C/P 74223/*
25	C/146025..../M. C/146225..../M	QM/146025/00	QC/146025/88/*	2 + 3	Seal-/cover strip	1	C/P 40262/*	C/P 74131/*
32	C/146032..../M. C/146232..../M	QM/146032/00	QC/146032/88/*	4 + 5	O-ring	2	C/P 40344/*	C/P73936/*
40	C/146040..../M. C/146240..../M	QM/146040/00	QC/146040/88/*	6	Seal	2	C/P 40263/*	C/P73945/*
50	C/146050..../M. C/146250..../M	QM/146050/00	QC/146050/88/*	8	Seal	2	C/P 40626/*	C/P73946/*
63	C/146063..../M. C/146263..../M	QM/146063/00	QC/146063/88/*	10	Wiper	1	C/P 40626/*	C/P73946/*
80	C/146080..../M	QM/146080/00	QC/146080/88/*		Grease	1	C/P 40715/*	C/P 74232/*

* Insert stroke length in inches
Note: Please quote the cylinder type number when ordering spare parts

For C/146100. .../M Externally guided models

Ø	Type	NPT spares kit	Spares kit w/seal and cover strip	Comprising Item	Description	Quantity	Seal strip Item 2	Cover strip Item 3
20	C/146120..../M	QM/146120/00	QC/146120/88/*	1	Clamping lever (ø 25 ... 63)	2	C/P 40262/*	C/P 74223/*
25	C/146125..../M	QM1/46125/00	QC/146125/88/*	2 + 3	Seal-/cover strip	1	C/P 40262/*	C/P 74131/*
32	C/146132..../M	QM/146132/00	QC/146132/88/*	4 + 5	O-ring	2	C/P 40344/*	C/P73936/*
40	C/146140..../M	QM/146140/00	QC/146140/88/*	6	Seal	2	C/P 40263/*	C/P73945/*
50	C/146150..../M	QM/146150/00	QC/146150/88/*	7	Guide bar	4	C/P 40626/*	C/P73946/*
63	C/146163..../M.	QM/146163/00	QC/146163/88/*	8	Seal	2	C/P 40626/*	C/P 73946/*
80	C/146180..../M	QM/146180/00	QC/146180/88/*	9	Felt	2	C/P 40715/*	C/P 74232/*
				10	Wiper	1		
					Grease	1		

* Insert stroke length in inches
Note: Please quote the cylinder type number when ordering spare parts

NORGREN ENGINEERING ADVANTAGE

C/146000, C/146100, C/146200

Spares Kits for cylinders with Metric ports and stroke in millimeters

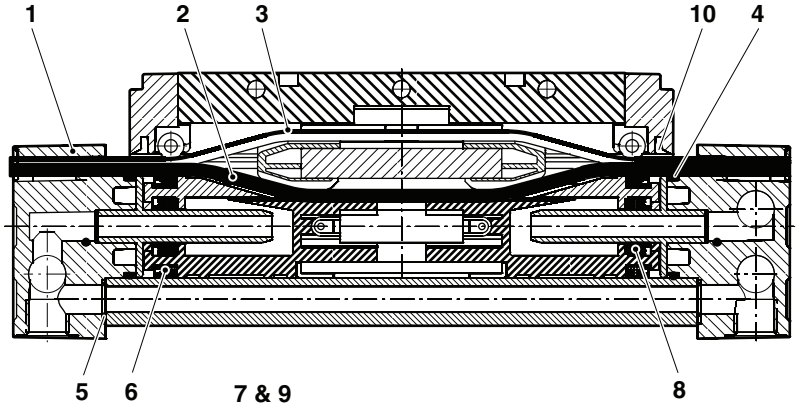

Internal

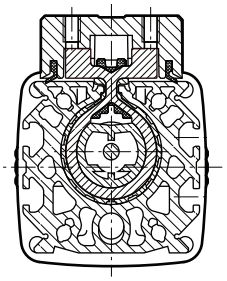

External

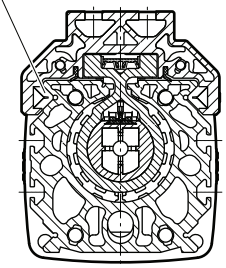

Roller

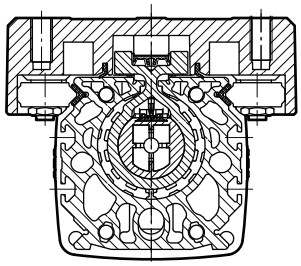

For M/146000. .../M. M/146200. .../M Internally and Roller guided models

Ø	Type	Metric spares kit	Spares kit w/seal and cover strip	Comprising Item	Description	Quantity	Seal strip Item 2	Cover strip Item 3
16	M/146016..../M	QM/146016/00	QM/146016/88/*	1	Clamping lever (ø 25 ... 63)	2	M/P 40262/*	M/P 74223/*
20	M/146020..../M	QM/146020/00	QM/146020/88/*	2 + 3	Seal-/cover strip	1	M/P 40262/*	M/P 74223/*
25	M/146025..../M. M/146225..../M	QM/146025/00	QM/146025/88/*	4 + 5	O-ring	2	M/P 40262/*	M/P 74131/*
32	M/146032..../M. M/146232..../M	QM/146032/00	QM/146032/88/*	6	Seal	2	M/P 40344/*	M/P73936/*
40	M/146040..../M. M/146240..../M	QM/146040/00	QM/146040/88/*	8	Seal	2	M/P 40263/*	M/P73945/*
50	M/146050..../M. M/146250..../M	QM/146050/00	QM/146050/88/*	10	Wiper	1	M/P 40626/*	M/P73946/*
63	M/146063..../M. M/146263..../M	QM/146063/00	QM/146063/88/*		Grease	1	M/P 40626/*	M/P73946/*
80	M/146080..../M	QM/146080/00	QM/146080/88/*				M/P 40715/*	M/P 74232/*

* Insert stroke length in millimeters
Note: Please quote the cylinder type number when ordering spare parts

For M/146100. .../M Externally guided models

Ø	Type	Metric spares kit	Spares kit w/seal and mover strip	Comprising Item	Desmription	Quantity	Seal strip Item 2	Mover strip Item 3
16	M/146116..../M	QM/146116/00	QM/146120/88/*	1	Clamping lever (ø 25 ... 63)	2	M/P 40270/*	M/P 74216/*
20	M/146120..../M	QM/146120/00	QM/146120/88/*	2 + 3	Seal-/cover strip	1	M/P 40262/*	M/P 74223/*
25	M/146125..../M	QM1/46125/00	QM/146125/88/*	4 + 5	O-ring	2	M/P 40262/*	M/P 74131/*
32	M/146132..../M	QM/146132/00	QM/146132/88/*	6	Seal	2	M/P 40344/*	M/P73936/*
40	M/146140..../M	QM/146140/00	QM/146140/88/*	7	Guide bar	4	M/P 40263/*	M/P73945/*
50	M/146150..../M	QM/146150/00	QM/146150/88/*	8	Seal	2	M/P 40626/*	M/P73946/*
63	M/146163..../M.	QM/146163/00	QM/146163/88/*	9	Felt	2	M/P 40626/*	M/P 73946/*
80	M/146180..../M	QM/146180/00	QM/146180/88/*	10	Wiper	1	M/P 40715/*	M/P 74232/*
					Grease	1		

* Insert stroke length in millimeters
Note: Please quote the cylinder type number when ordering spare parts

C/146000/MC – cylinder with alternative ports (ø 25 ... 63 mm)

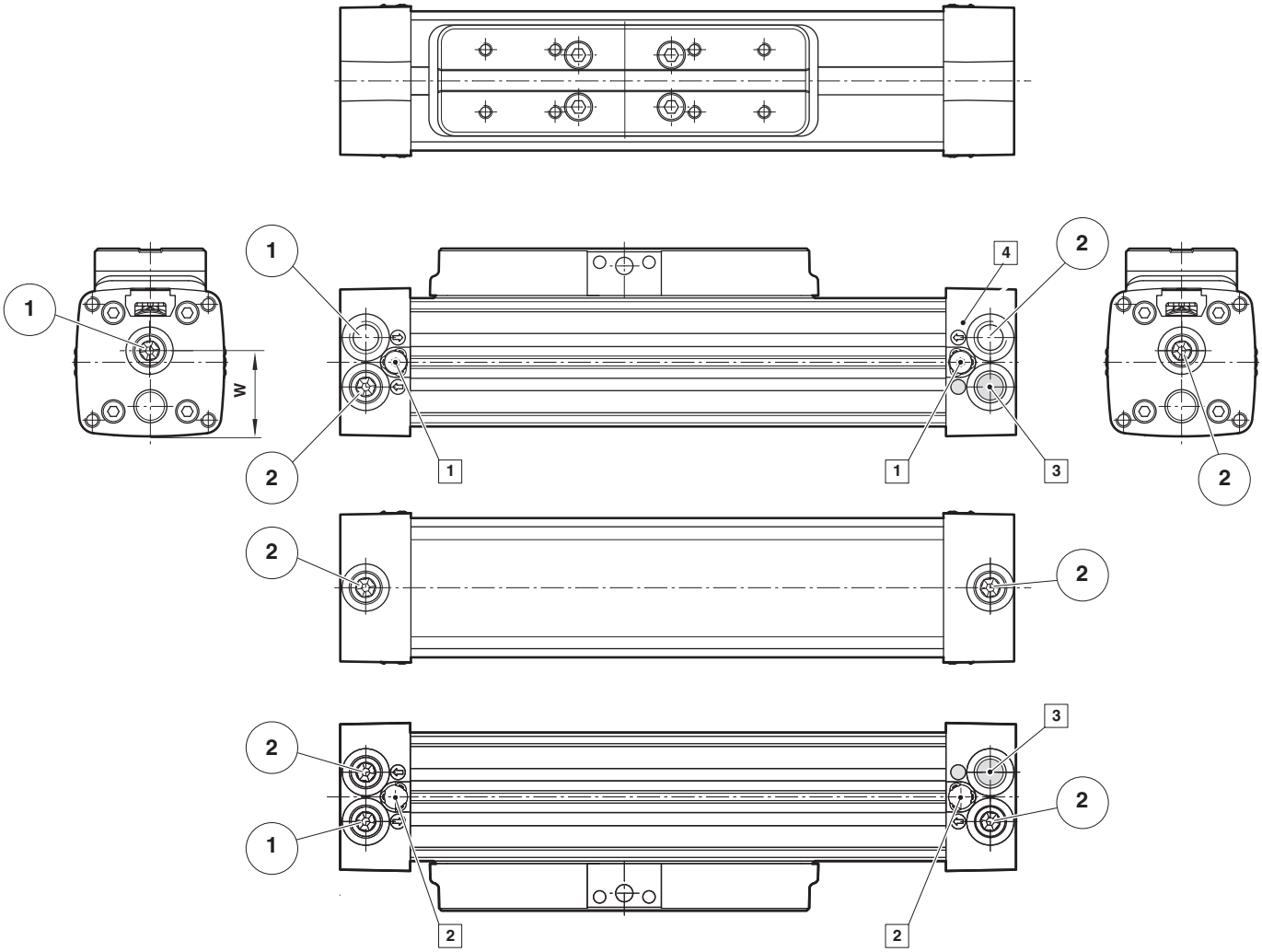

Type	Ø	W
C/146.25/..	25	1.10 (28)
C/146.32/..	32	1.36 (34.5)
C/146.40/..	40	1.71 (43.5)
C/146.50/..	50	2.09 (53)
C/146.63/..	63	2.34 (59.5)

1. Pressurrize port (2) to move carriage right to left.
2. Pressurize port (1) to move carriage left to right.
3. Port [3] lower port on right end cap is non-functioning.

[1] **Cushion screw**
[2] **Hole without thread**
[3] **Port without function**
[4] **Moving direction**

NORGREN
ENGINEERING ADVANTAGE

LINTRA®-Lite rodless cylinders

A44000

Double acting

Ø 25 ... 40 mm

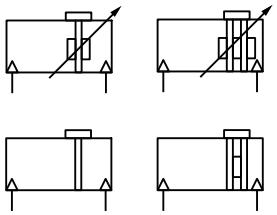

New compact. space-saving design

Proven sealing system

Integral switch mounting

Buffer or adjustable cushioning

Standard foot mountings

Technical data

Medium:

Compressed air. filtered. lubricated or non-lubricated

Operation:

Double acting. buffer or adjustable cushioning. magnetic or non-magnetic piston

Operating pressure:

15 to 116 psig

Operating temperature:

-22°F to +180°F max.
Consult our Technical Service for use below +35°F

Strokes:

Made to order
maximum 236 inches

Materials

Barrel: anodised aluminum alloy
End covers: zinc plated steel/aluminum
Yoke: anodized aluminum alloy
Pistons: plastic
Cover: plastic
Sealing strip: polyurethane
Cover strip: polyamide
Seals: nitrile rubber & polyurethane

Standard models

Ø	Non-magnetic Buffer cushioning	Non-magnetic Adjustable cushioning	Magnetic Buffer cushioning	Magnetic Adjustable cushioning
25	A44025AAAAN*	A44025AACAN*	A44025AABAN*	A44025AADAN*
32	A44032AAAAN*	A44032AACAN*	A44032AABAN*	A44032AADAN*
40	A44040AAAAN*	A44040AACAN*	A44040AABAN*	A44040AADAN*

* Cylinders shown above use NPT porting, stroke length in inches.
For ISO G porting insert an "A" in the 11th position and provide stroke length in mm.
Note: For service kits see Norgren website reference below.

Options selector

A440✶✶AA✶A✶✶✶✶✶

Cylinder Diameter Nominal Inch (mm)		Specify
ø 1"	(ø 25mm)	25
ø 1-1/4"	(ø 32mm)	32
ø 1-1/2"	(ø 40mm)	40

Variants	Specify
Bumper cushioning, non-magnetic piston	A
Bumper cushioning, magnetic piston	B
Adjustable cushioning, non-magnetic piston	C
Adjustable cushioning, magnetic piston	D

Porting	Specify
ISO G-thread (Specify stroke in mm)	A
NPT-Thread (Specify stroke in inches)	N

Fractional Increments of Stroke in Inch			
A = 0	E = 1/4	J = 1/2	P = 3/4
B = 1/16	F = 5/16	K = 9/16	R = 13/16
C = 1/8	G = 3/8	M = 5/8	S = 7/8
D = 3/16	H = 7/16	N =11/16	T = 15/16
X = Special			

Specify Stroke Length*
236 inches (6000mm) maximum

*inches for NPT (mm for ISO G) thread

Bore Size Conversion:		
ø 25mm =	.984"	1"
ø 32mm =	1.260"	1-1/4"
ø 40mm =	1.575"	1-1/2"

Mountings

Ø	S	V
	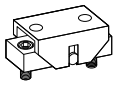	
25	Q44025AAAAAM337	Q44025AAAAAM332
32	Q44032AAAAAM337	Q44032AAAAAM332
40	Q44040AAAAAM337	Q44040AAAAAM332

LINTRA®-Lite rodless cylinders

A44000

Double acting

Ø 25 ... 40 mm

Standard cylinders
A44000

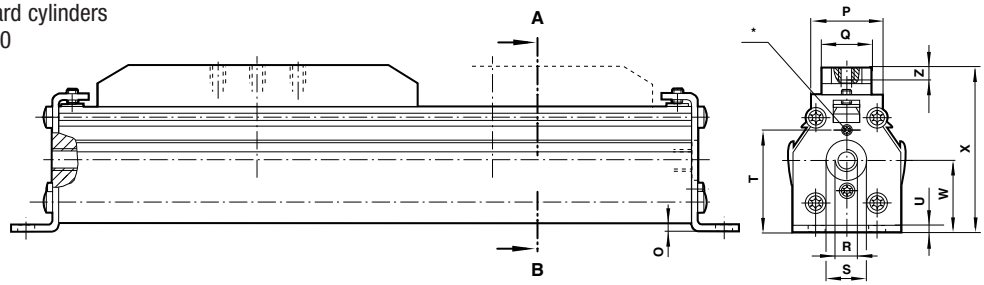

*Cushion screws for cylinders with adjustable cushioning

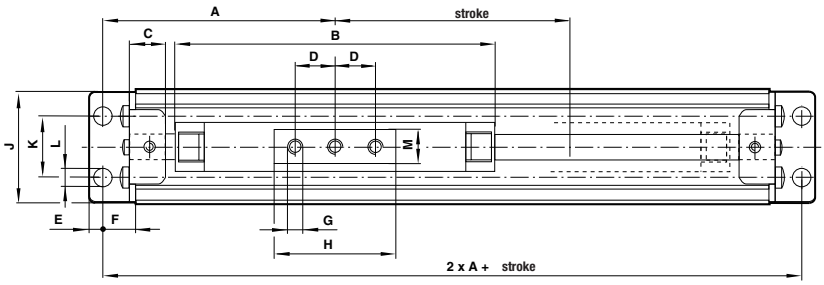

A - B

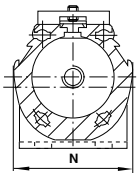

Ø	A	B	C	D	E	F	G	H	J	K	Ø L	M	N	O	P	Q	R (port	Ø S	T	U	W	X	Z max.	Wt per inch (mm) of stroke lb (kg)
25	3.03	3.94	0.47	0.49	0.20	0.47	M5	1.57	1.42	0.71	0.28	0.71	1.57	0.10	1.10	0.87	NPT 1/8"	0.47	1.20	0.08	0.85	2.10	0.28	0.08
	(77)	(100)	(12)	(12.5)	(05)	(12)		(40)	(36)	(18)	(07)	(18)	(40)	(2.5)	(28)	(22)	G1/8	(12)	(30.5)	(2)	(21.5)	(53.5)	(7)	(0.15)
32	3.66	4.72	0.71	0.59	0.28	0.59	M6	1.97	1.89	1.02	0.35	0.79	1.95	0.10	1.26	0.94	NPT 1/8"	0.67	1.57	0.12	1.12	2.76	0.39	0.14
	(93)	(120)	(18)	(15)	(07)	(15)		(50)	(48)	(26)	(09)	(20)	(49.5)	(2.5)	(32)	(24)	G1/8	(17)	(40)	(3)	(28.5)	(70)	(10)	(0.25)
40	4.63	6.50	0.71	0.79	0.28	0.67	M6	2.36	2.13	1.18	0.35	0.79	2.24	0.14	1.42	0.94	NPT 1/4"	0.79	1.95	0.12	1.38	3.21	0.39	0.19
	(117.5)	(165)	(18)	(20)	(07)	(17)		(60)	(54)	(30)	(09)	(20)	(57)	(3.5)	(36)	(24)	G1/4	(20)	(48.5)	(3)	(35)	(81.5)	(10)	(0.35)

Dimensions in inches (mm)

Swinging bridge – S
Q44000AAAAAM337

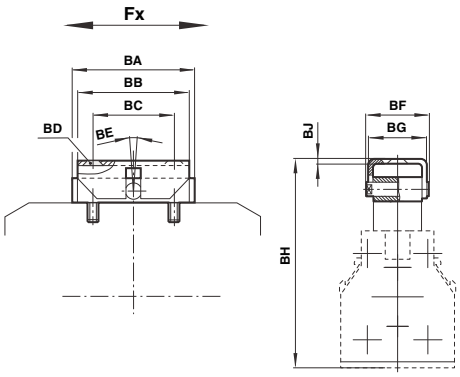

Ø mm	BA	BB	BC	BD (DIN74)	BE	BF	BG	BH	BJ	Weight lbs (kg)
25	1.57	1.57	1.10	BM6	± .315	1.14	1.10	2.70 +0.2 -0	0.08	0.33
	(40)	(40)	(28)		(± 8)	(29)	(28)	(68.5 +5 -0)	(2)	(0.15)
32	1.97	2.17	1.57	BM6	± .315	1.22	1.18	3.44 +0.2 -0	0.08	0.44
	(50)	(55)	(40)		(± 8)	(31)	(30)	(87.5 +5 -0)	(2)	(0.20)
40	2.36	2.17	1.57	BM6	± .315	1.22	1.18	3.92 +0.2 -0	0.08	0.55
	(60)	(55)	(40)		(± 8)	(31)	(30)	(99.5 +5 -0)	(2)	(0.25)

Dimensions in inches (mm)

Center support – V
Q44000AAAAAM332

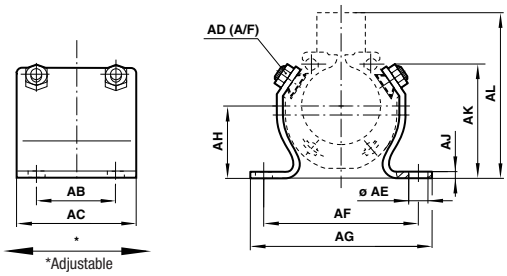

Ø mm	AB	AC	AD (A/F)	ØAE	AF	AG	AH	AJ	AK	AL	Weight lbs (kg)
25	0.98	1.57	0.39	0.26	2.28	2.76	0.85	0.12	1.22	2.11	0.15
	(25)	(40)	(10)	(6.6)	(58)	(70)	(21.5)	(3)	(31)	(53.5)	(0.07)
32	1.18	1.97	0.39	0.35	2.76	3.27	1.12	0.12	1.69	2.76	0.33
	(30)	(50)	(10)	(9)	(70)	(83)	(28.5)	(3)	(43)	(70)	(0.15)
40	1.57	2.36	0.39	0.35	3.11	3.62	1.37	0.12	2.17	3.21	0.55
	(40)	(60)	(10)	(9)	(79)	(92)	(35)	(3)	(55)	(81.5)	(0.25)

Dimensions in inches (mm)

NORGREN
ENGINEERING ADVANTAGE

LINTRA®-Lite rodless cylinders

A44000

Double acting

Ø 25 ... 40 mm

Self-retaining Sealing System has one of the lowest leakage rates in the industry.

The LINTRA®-LITE rodless cylinder is a cost effective solution for application where light loading is required or where external guiding will be used to support the load.

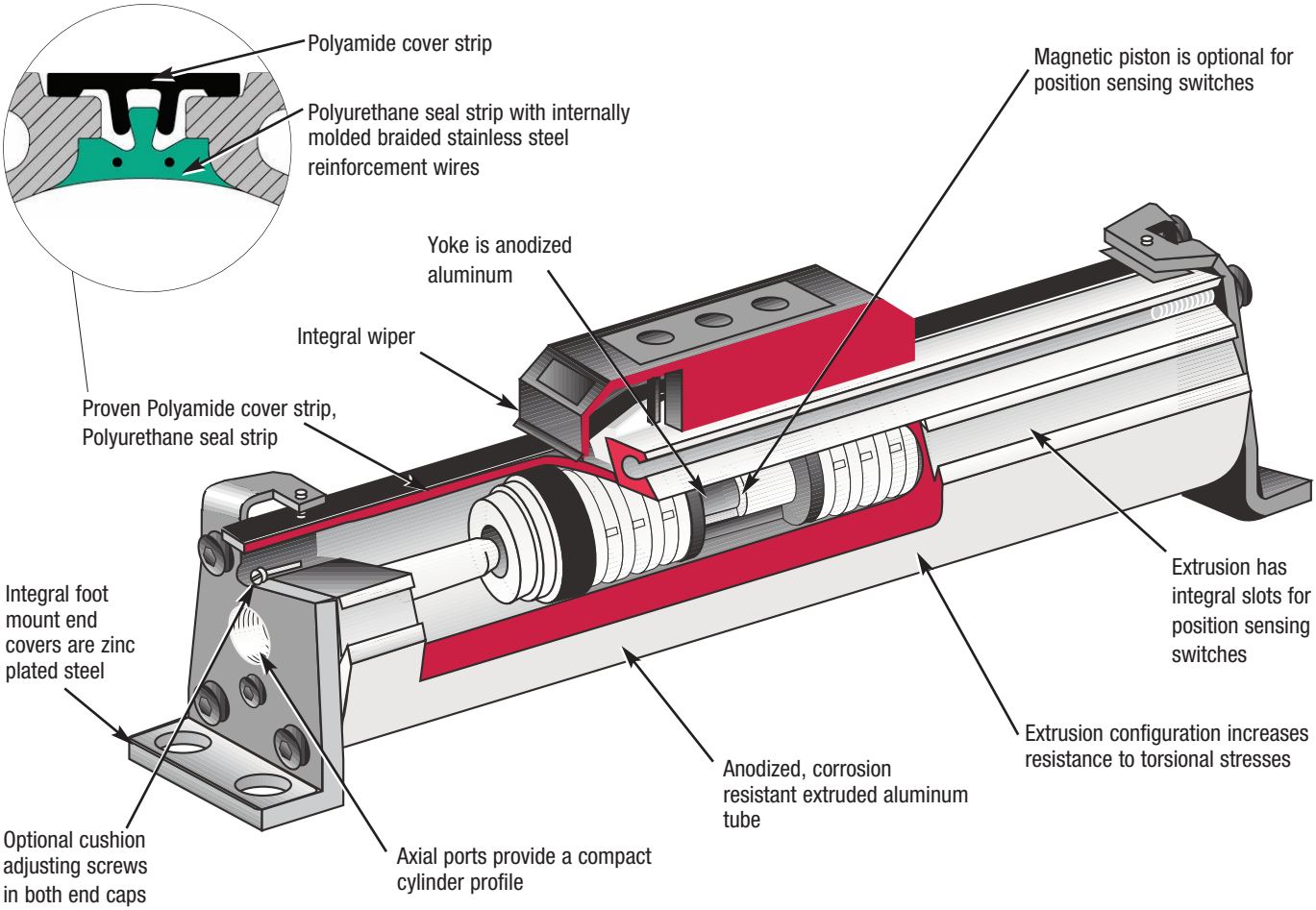

LINTRA®-Lite rodless cylinders

A44000

Double acting

Ø 25 ... 40 mm

Features

- Lintra®-Lite rodless cylinders require less space for installation since the stroke of the cylinder is contained within the length of the cylinder itself.
- Non-rotating load carrying capability without additional guide rods and bearings.
- Rodless design means there is no rod that can buckle or kink.
- Equal forces can be applied to each stroke direction.
- All stroke lengths are custom made to customer requirements.
- Stroke lengths are available up to 236" (6000mm). For longer stroke lengths, consult factory.
- Lintra®-Lite features a choice of bore sizes:
  Ø 1" = 0.984" (Ø 25mm)
  Ø 1-1/4" = 1.260" (Ø 32mm)
  Ø 1-1/2" = 1.575" (Ø 40mm)
- Cushion adjustment optional at both ends of the cylinder.
- Magnetic piston optional.
- Integral switch rail on both sides of the extrusion.
- Main components are made of anodized, corrosion resistant aluminum, with zinc plated steel integral foot mount end covers.
- Velocities up to 4.9 ft/sec (1.5 m/s) are achievable.
- The Lintra®-Lite is designed for easy maintenance.
- Polyurethane seals provide long life.

The Extruded Tube of the LINTRA¨–LITE Series A44000 Cylinder

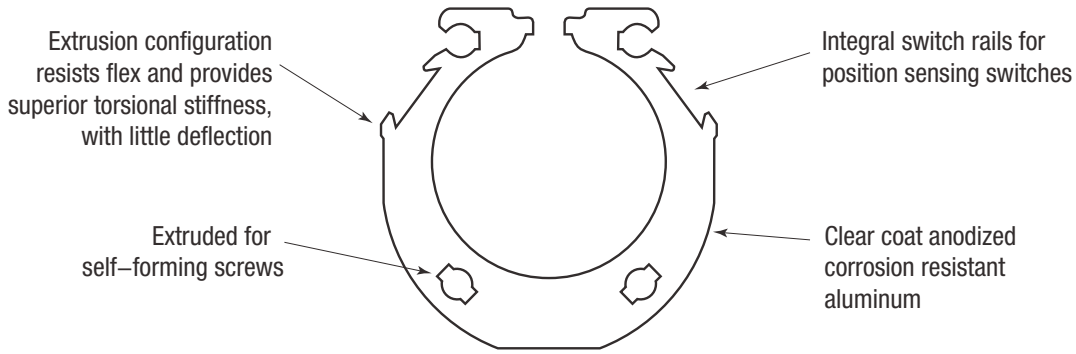

Cylinder Deflection

Deflection due to external load.

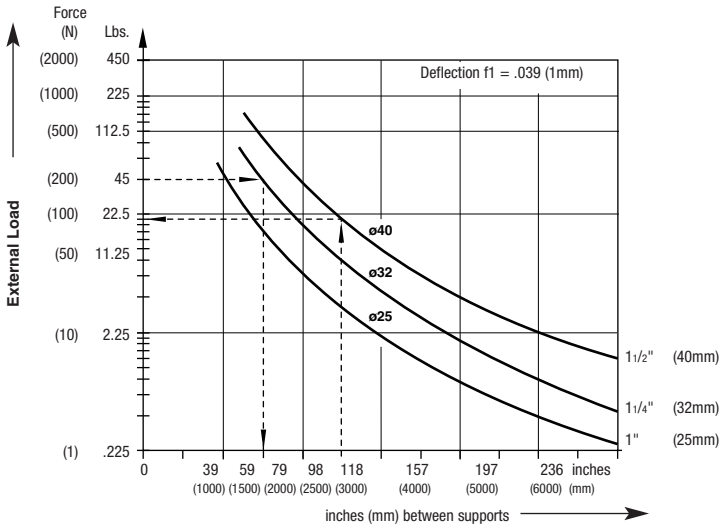

Cylinder ø1-1/4" (32mm), stroke length 138" (3500mm), external load 45 lbs. (200 N). Maximum distance between supports = 59 inches (1500mm) (see diagram). Therefore additional support is required.

Deflection due to cylinder weight.

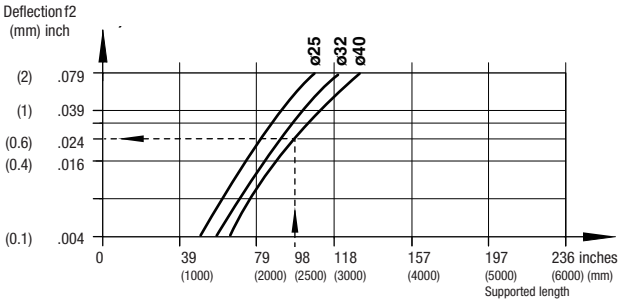

Cylinder ø 40mm, external force 25 lbs. force (120 N), distance between supports 98 inches (2500mm).
Required: Total deflection

1.Deflection due to external force (f1): See diagram .039"/20.23 lbs. (1mm/90 N) x 25 lbs. (120 N)	.051"	(1.3mm)
2.Deflection due to cylinder weight (f2): See diagram	+.024"	(0.6mm)
Total deflection:	.075"	(1.9mm)

Maximum permitted deflection:
f1 + f2 ≤ .039 inches (1mm) per 39.37 inches (1000mm) stroke. Result: .075 inches (1.9mm) are below the maximum permitted deflection of .098 inches (2.5mm).

Operating Specifications

Operating Temperature:
-22° to 180°F* (-30°C to 80°C)
*With dewpoint of supply air less than ambient air temperature at cylinder, consult our Technical Service for use below +36°F (+2°C)

Operating Pressure:
15 to 116 psig (1 to 8 bar)

Bore Sizes:
Ø 1" = 0.984" (Ø 25mm)
Ø 1-1/4" = 1.260" (Ø 32mm)
Ø 1-1/2" = 1.575" (Ø 40mm)

Stroke Lengths:
236 inches (6000mm) max.

Supply:
Compressed air, filtered to 50-microns and lubricated.

Cushion Lengths:
Ø 1" = 0.709"(Ø 25mm = 18mm)
Ø 1-1/4" = 0.906" (Ø 32mm = 23mm)
Ø 1-1/2" = 1.378" (Ø 40mm = 35mm)

Materials of Construction

Barrel: Anodized aluminum alloy
End covers: Zinc plated steel/aluminum
Yoke: Anodized aluminum alloy
Cover and Pistons: Plastic
Sealing strip: Polyurethane
Cover strip: Polyamide
Seals: Nitrile rubber and polyurethane

Loading values for LINTRA®-LITE cylinders

The values given in the table below show the forces in the directions Fy and Fz and the maximum moments Mx, My and Mz. All values are applicable for speeds up to .66 ft/s (0.2 m/s). A requirement for using these values is a smooth movement of the mass over the whole stroke length of the cylinder. The reference point from which the moments for all cylinders should be calculated is the center line of the piston.

Total loads

When a LINTRA®-LITE cylinder has to take several loads and moments, an additional calculation is necessary using the following formula:

$$\frac{Mx}{Mx\ max} + \frac{My}{My\ max} + \frac{Mz}{Mz\ max} + \frac{Fy}{Fy\ max} + \frac{Fz}{Fz\ max} \leqslant 1$$

Thrust – Based on 75% of Theoretical Thrust

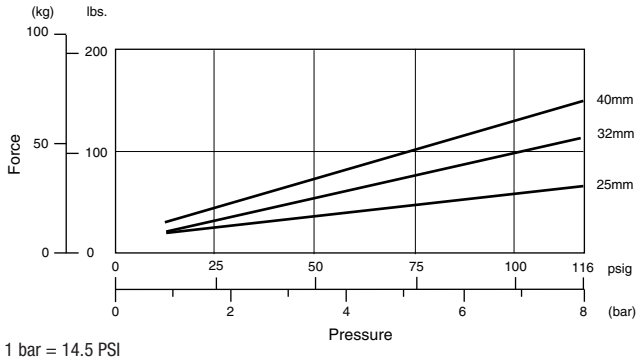

1 bar = 14.5 PSI
1 kg = 2.205 lbs.
1 m/s = 3.3 ft/s

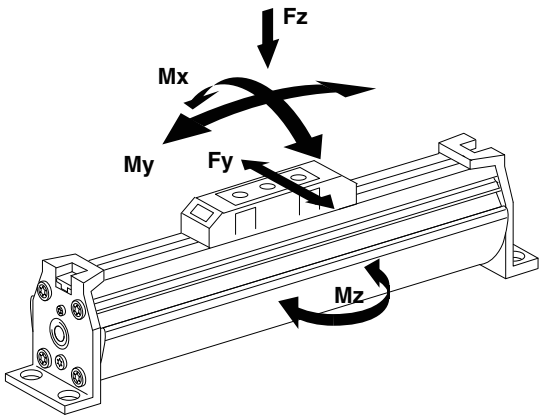

Thrust • Air Consumption • Cushion Length • Loading Values

Cylinder Inch	Ø mm	Theoretical forces at 6 bar lbs	(N)	Air consumption per stroke at 6 bar cu.ft./in.	(l/cm)	Cushion length Inch	(mm)	Loading values Fy lbs	(N)	Fz lbs	(N)	Mx in/lbs	(Nm)	My in/lbs	(Nm)	Mz in/lbs	(Nm)
1"	25	56	(250)	0.03	(0.035)	.709	(18)	20	(90)	63	(280)	9	(1)	115	(13)	35	(4)
1-1/4"	32	92	(410)	0.04	(0.056)	.906	(23)	27	(120)	83	(370)	18	(2)	186	(21)	53	(6)
1-1/2"	40	143	(640)	0.06	(0.088)	1.378	(35)	54	(240)	162	(720)	36	(4)	496	(56)	142	(16)

Loading values applicable to a speed of ⩽ 66 ft/s (⩽ 0.2 m/s). Maximum working life is normally reached below a speed of 3.3 ft/s (1 m/s).

Spares

LINTRA®-Lite rodless cylinders

A44000

Double acting

Ø 25 ... 40 mm

Cylinders with Bumper Cushioning

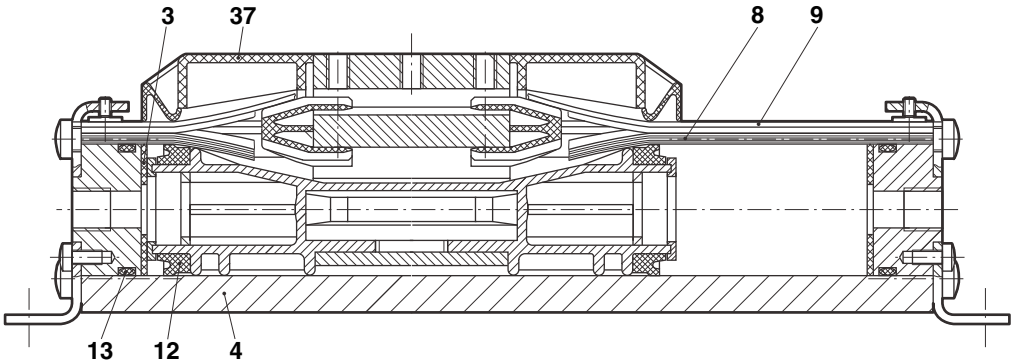

Cylinders with Adjustable Cushioning

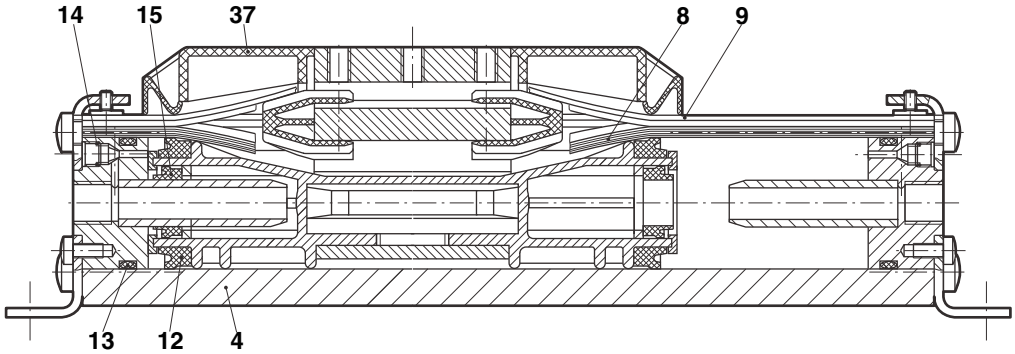

Replacement Parts for A44000AAVAN with NPT Port Thread and Stroke in inches

Cylinder Ø	Model	Spares kit includes:	Item	Description	Quantity	Seal strip Item 8	Cover strip Item 9	Tube Item 4
1"	A44025AAVAN	Q44025AACANT788*	3	Bumper	2	C/P41628/*	C/P41631/*	C/P41607/*
1¼"	A44032AAVAN	Q44032AACANT788*	8/9	Seal/cover strip	1/1	C/P41629/*	C/P41632/*	C/P41613/*
1½"	A44040AAVAN	Q44040AACANT788*	12/15	Piston/cushion seal	2/2	C/P41630/*	C/P41633/*	C/P41602/*
	✶ Variants A, B, C or D	* Insert stroke length in inches.	13/14	O-Ring	2/2	* Insert stroke length in inches.		
			37	Cover	1			
				Grease	2			

NOTE: Spares kits are common for all cylinder variants. Please specify the cylinder model number when ordering spare parts.

Replacement Parts for A44000AAVAA with ISO-G Port Thread and Stroke in mm

Cylinder Ø	Model	Spares kit includes:	Item	Description	Quantity	Seal strip Item 8	Cover strip Item 9	Tube Item 4
25mm	A44025AAVAA	Q44025AACAAT788*	3	Bumper	2	M/P41628/*	M/P41631/*	M/P41607/*
32mm	A44032AAVAA	Q44032AACAAT788*	8/9	Seal/cover strip	1/1	M/P41629/*	M/P41632/*	M/P41613/*
40mm	A44040AAVAA	Q44040AACAAT788*	12/15	Piston/cushion seal	2/2	M/P41630/*	M/P41633/*	M/P41602/*
	✶ Variants A, B, C or D	* Insert stroke length in mm.	13/14	O-Ring	2/2	* Insert stroke length in mm.		
			37	Cover	1			
				Grease	2			

NOTE: Spares kits are common for all cylinder variants. Please specify the cylinder model number when ordering spare parts.

Torx® Screws

Tube Torque Torx® Screw 1 (4)

Cylinder Ø	Screw Size	Torque	Tool Size
1" (25mm)	M4x16	3-3.5 Nm	T-20
1¼" (32mm)	M5x20	6-7 Nm	T-25
1½" (40mm)	M6x25	9-10 Nm	T-30

Cap to Mounting Plate Torx® Screw 2 (1)

Cylinder Ø	Screw Size	Torque	Tool Size
1" (25mm)	M3x8	.8-1 Nm	T-10
1¼" (32mm)	M3x8	.8-1 Nm	T-10
1½" (40mm)	M4x10	3-3.5 Nm	T-20

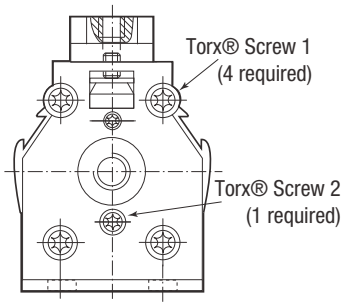

NORGREN
ENGINEERING ADVANTAGE

Roundline Plus Stainless Steel Body Actuators

5/16" to 3" bore

Single and Double acting actuators

Full range of bore sizes

All essential models

Optional Ecology seal

Technical data

Medium:

Filtered, lubricated or non-lubricated, compressed air

Maximum Operating Pressure:

250 psig (17.2 bar)

Temperature Range*:

Standard Nitrile Seals:
-20° to 200°F (-29° to 93°C)
Viton/High temp Seals:
-20° to 400°F (-29° to 205°C)

*With dew point of supply air less than air temperature below 35°F (2°C)

Lubrication:

All Roundline Plus cylinders are pre-lubricated during assembly with a Teflon® based grease for non-lube service and long life.

Materials

Cylinder Body:
304 Stainless Steel

Head and Cap:
Aluminum Alloy

Piston Rod:
Stainless steel in double rod cylinders, and 5/16", 7/16", and 9/16" bores. Chrome plated steel in all other bore sizes

Rod Bearing: Oil Impregnated Sintered Bronze

Piston: Aluminum Alloy or stainless steel

Rod & Piston Seals: Nitrile

Pivot Bracket, Rod Clevis, Foot Bracket, Mounting Nut: Bright Zinc Plated Carbon Steel

Options selector

RP 075 x 2.50 - DAN - PS

Series

Roundline Plus	RP
Roundline Plus with Ecology seals*	*ERP

Bore Size

5/16"	031
7/16"	043
9/16"	056
3/4" (E)	075
7/8"	087
1-1/16" (E)	106
1-1/4" (E)	125
1-1/2" (E)	150
1-3/4"	175
2" (E)	200
2-1/2" (E)	250
3" (E)	300

E - Available with Ecology Seals

Stroke

Increments of 1/16" up to a maximum. See table

Mounting Options

Single Acting Nose	SAN
Single Acting Pivot	SAP
Single Acting Front Block	SBF
Single Acting Rear Block	SBR
Single Acting Front Trunnion	STF
Single Acting Rear Trunnion	STR
Single Acting Non-Rotating Nose	NRN
Single Acting Non-Rotating Pivot	NRP
Reverse Acting Nose	RAN
Reverse Acting Pivot	RAP
Reverse Acting Front Block (available in 3/4", 1-1/16" & 1-1/2" only)	RAF
Reverse Acting Rear Block	RAR
Double Acting Nose	DAN
Double Acting Pivot	DAP
Double Acting Double End Mount	DAD
Double Acting Front Block	DAF
Double Acting Rear Block	DAR
Double Acting Front Trunnion	DFT
Double Acting Rear Trunnion	DRT
Double Acting Double Rod End	DRD

Mounting Options

Adjustable Cushion Head End	CH†††
Adjustable Cushion Cap End	CC†††
Adjustable Cushion Both Ends	CB†††
Bumpers	UB
Alternate Port Location	PL(__)
Side Ported End Cap (DAN, SAN, and DAFmodels only, note length adder)	PC
Magnetic Piston	PS
Switch Rail and location	M1,M2, M3,M4
Non-Adjustable cushion head end	NH*
Non-Adjustable cushion cap end	NC*
Non-Adjustable cushions both ends	NB*
No Flats (no plain rod stick out)	NF**
No Rod Thread	PR
No Pin	NP
Pivot Bushing (no pin)	PO
Non-Standard Male Thread	TM(__)
Non-Standard Female Thread	FT(__)
Thread extension over standard (specify additional length)	TX†(__)
Rod extension over standard (specify additional length)	RX†(__)
Stainless Steel piston rod (standard on certain models)	SS
Viton/High Temperature Seals	HT
Rod Wiper (not available with HT)	RW

* ERP, ecology cylinders come complete with non-adjustable cushions both ends (NH, NC, NB, options not required in model number of ERP cylinder). ERP on DAP, DAF, DAD, and DAN models only (add PC option length adder to DAN models)

** Available only on 1-1/16" bore - RAN and RAP, mounts.

† Male thread extension only. Consult factory for negative thread or rod extensions.

††† Available on 075, 106, 150, 200, 250 & 300 Bores.

Maximum Stroke Lengths††

Bore	Single & Reverse Acting	Double Acting
5/16"	4	12
7/16"-9/16"	12	36
3/4"-1-3/4"	12	36
2"	4	36
2-1/2"-3"	-	36

†† Consult factory for longer stroke lengths.

Norgren.com/usa – 303.794.2611 – help@amer.norgren.com

Roundline Plus Stainless Steel Body Actuators

1. Oil impregnated sintered bronze Rod Bearing provides exceptional rod support, and optimal cycle life
2. Chrome plated carbon steel Piston Rod for strength, smooth operation, and long life (stainless steel Piston Rod on 5/16, 7/16, 9/16 and all Double Rod cylinders)
3. Lip-Type nitrile Rod Seal, pressure energized and wear compensating
4. Head and Cap are solid aluminum alloy for strength and durability
5. Solid aluminum Piston is strong yet lightweight for low inertia
6. Lip-type nitrile Piston Seals are wear compensating for long life
7. 304 stainless steel Cylinder Body with polished I.D. ensures smooth performance and outstanding life cycle

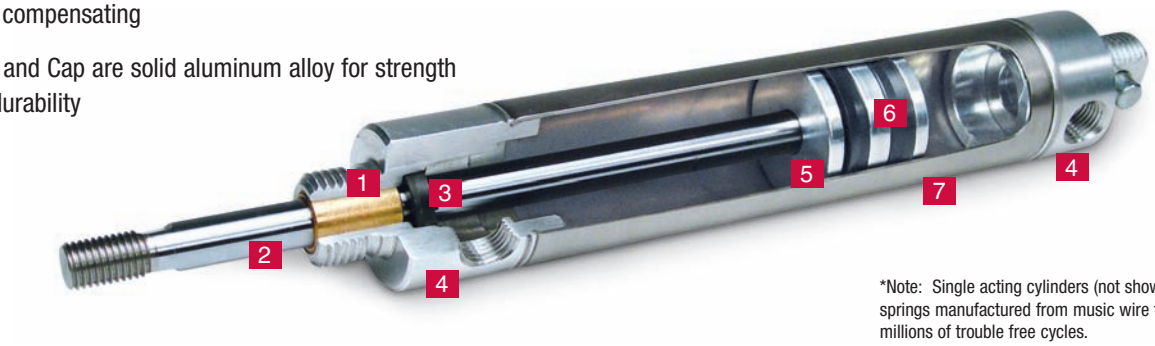

*Note: Single acting cylinders (not shown) use springs manufactured from music wire to provide millions of trouble free cycles.

Ecology Roundline Plus - ERP Model

The ERP model is the cost effective answer to load deceleration and faster through cushion performance.

1. IMPACT DAMPENING ECOLOGY PISTON SEALS
   - Increased load capabilities and cycle rates
   - Vibration and noise reduction
2. PRE-ENGINEERED NON-ADJUSTABLE CUSHION
   - Tamper resistant
   - Increased performance

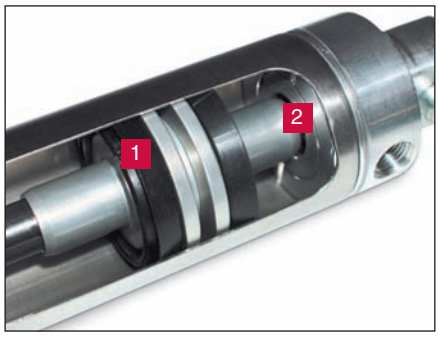

Roundline Ecology Piston Seal Option (ERP)

The Ecology (Impact Dampening) Piston Seal option is available on select inch bore size Roundline cylinders in DAP, DAD, and DAN configurations. This option includes non-adjustable air cushions on both the extend and retract stroke of the cylinder. By including the Ecology Piston Seal option, cylinders can be specified based on weights of load being carried and speed of load. This is shown in the table below.

Energy Absorption Capacity of the Impact Dampening Piston Seal

This chart represents the energy absorption capacity of the Impact Dampening piston seals with standard Non-Adjustable air cushions. The values given are usable pounds stoppable at stated piston speeds.

	Cylinder Bore					
In/Sec	3/4	1-1/16	1-1/4	1-1/2	2	2-1/2
6	36.6	62.3	74.5	115.5	258.9	421.1
12	5.6	15.6	18.6	28.9	64.7	105.3
18	2.5	6.9	8.3	12.8	28.8	46.8
24	1.4	3.9	4.7	7.2	16.2	26.3
30	0.9	2.5	3.0	4.6	10.4	16.8
36	0.6	1.7	2.1	3.2	7.2	11.7
42	0.5	1.3	1.5	2.4	5.3	8.6
48	0.3	1.0	1.2	1.8	4.0	6.6
54	0.3	0.8	0.9	1.4	3.2	5.2
60	0.2	0.6	0.7	1.2	2.6	4.2

Effect of Impact Dampening Seals on Total Stroke of Cylinders						
	Cylinder Bore					
PSI	3/4	1-1/16	1-1/4	1-1/2	2	2-1/2
0	.11	.12	.12	.14	.15	.17
20	.08	.09	.09	.10	.10	.12
40	.05	.06	.06	.07	.07	.08
60	.03	.04	.04	.04	.04	.05
80	.01	.02	.02	.02	.02	.02
100	0	0	0	0	0	0

The figure above represents total stroke loss (both ends) for the pressure indicated for new cylinders. The impact dampening seals will take some compression set during operation of the cylinder and the stroke loss will decrease. To determine stroke loss for either head or cap divide the value shown by 2.

NORGREN ENGINEERING ADVANTAGE

Roundline Plus Stainless Steel Body Actuators

Dimensions in inches

Force Factor Data

Bore	Code	Force Factor (Area)	
		Extend	Retract
5/16"	(031)	0.077	0.064
7/16"	(043)	0.15	0.12
9/16"	(056)	0.25	0.22
3/4"	(075)	0.44	0.39
7/8"	(087)	0.6	0.55
1-1/16"	(106)	0.89	0.81
1-1/4"	(125)	1.23	1.08
1-1/2"	(150)	1.77	1.62
1-3/4"	(175)	2.41	2.21
2"	(200)	3.14	2.84
2-1/2"	(250)	4.91	4.61
3"	(300)	7.07	6.63

Force Output Formula

Cylinder Output Force = Force Factor (area) x Air Line Pressure (psi)

Ex: 1-1/16 bore cylinder operating at 80 psi:

Force exerted on the extend: 0.89 x 80 = 71.2 lbs.

Force exerted on the retract: 0.81 x 80 = 55.2 lbs.

Approximate Spring Forces (lbs.)

Bore	Code	Relaxed (lbs)	Compressed (lbs)
5/16"	(031)	0.5	1
7/16"	(043)	1	2
9/16"	(056)	2	4
3/4"	(075)	3	6
7/8"	(087)	3	6
1-1/16"	(106)	3	6
1-1/4"	(125)	7.5	15
1-1/2"	(150)	7	14
1-3/4"	(175)	11	24
2"	(200)	15	30

Air Reservoir

Air Reservoirs are made of the same high-quality stainless steel as the Series RP Cylinders.

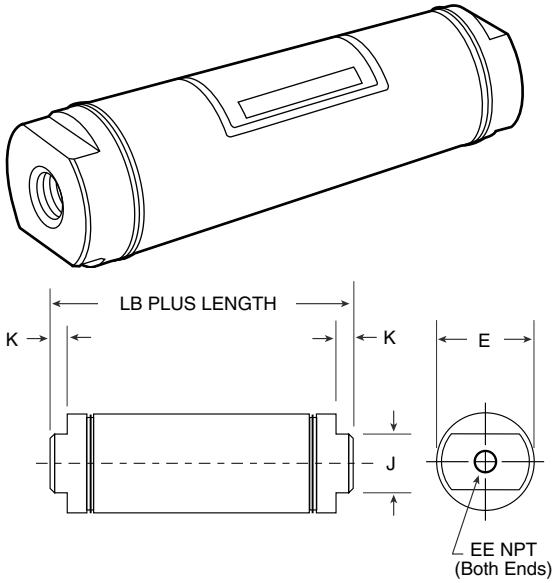

Dimensions — All Dimensions in Inches

Bore	E	EE	J	K	LB	Standard Internal Lengths
3/4"	0.813	1/8"	0.625	0.187	1.938	1" increments thru 4"
1-1/16"	1.125	1/8"	0.875	0.187	2.375	1" increments thru 8"
1-1/2"	1.562	1/8"	0.875	0.250	2.250	1" increments thru 16"
2"	2.080	1/4"	1.250	0.312	2.875	1" increments thru 16"
2-1/2"	2.610	1/4"	1.750	0.312	2.875	1" increments thru 24"

How to Order

Example:
1-1/16" bore air reservoir with a 3" internal length would be ordered as follows: AR-1-1/16 x 3

Roundline Plus Stainless Steel Body Actuators

CH,CC,CB - Adjustable Cushions

Available only on DAN, DAP, and DAD models.
Available on bore sizes: 3/4", 1-1/16", 1-1/2", 2", 2-1/2", 3"
Position #4 standard

UB - Bumpers

- Standard on 5/16", 7/18", 1-1/4", and 1-3/4" bore sizes.
- The UB option will increase the overall length on all other bore sizes (see chart for length changes).
- Single acting models will have one bumper on the piston side opposite the spring.
- Bumpers are not included or available on ERP Ecology Seal models.
- When the HT high temperature option is ordered on these bore sizes, the bumpers are omitted and may change the overall length of the cylinder (except 5/16" bore, bumpers are not omitted).
- See "HT" Option below for further explanation of HT and UB in combination.

Bore	Increase in cylinder length due to the UB option			
	Single Acting	Reverse Acting	Double Acting	Double Rod End
5/16"	Std	Std	Std	Std
7/16"	0.062	0.125	0.188	0.25
9/16"	0.062	0.062	0.125	0.125
3/4"	0.125	0.125	0	0
7/8"	Std	Std	Std	Std
1-1/16"	0.125	0.125	0.125	0.5*
1-1/4"	Std	Std	Std	Std
1-1/2"	0.125	0.125	0.125	0.125
1-3/4"	Std	Std	Std	Std
2"	0.125	0.125	0.250	0.250
2-1/2"	0.125	0.125	0.250	0.250
3"	0.125	0.125	0.250	0.250

* When the UB and PS options are in combination on an 1-1/16" bore, double rod end, only the bumper length should be added. All other models and bore sizes should add the UB length and the PS length together.

HT - High Temperature Seals (Viton)

- For service up to 400°F
- Not available with RW rod wiper option.
- When ordered with the UB bumper option, bumpers will also be rated to 400°F.
- For cylinders where bumpers are standard, opting for HT will omit the bumpers and may decrease the overall length of the cylinder (except 5/16" bore). See chart below for length changes.
- For cylinders where bumpers are standard, if high temp bumpers are required, reference both HT and UB in the model number. This will provide high temp seals and bumpers and not change the overall length of the cylinder (except 5/16" bore).
- On the 5/16" bore, bumpers are always standard, and never omitted. Additionally, high temperature bumpers are not available on this bore size. As a result, with the HT option, the 5/16" bore cylinder is rated to 200°F.

Bore	Decrease in Overall length due to HT option (in.)			
	Single Acting	Reverse Acting	Double Acting	Double Rod End
5/16"	0.000	0.000	0.000	0.000
7/8"	0.090	0.125	0.220	0.250
1-1/4"	0.125	0.125	0.190	0.250
1-3/4"	0.125	0.125	0.250	0.250

PL(__) - Alternate Port Location

Designate location on head and cap respectively. For example: L(12) = Head port location 1, and Cap port location 2.

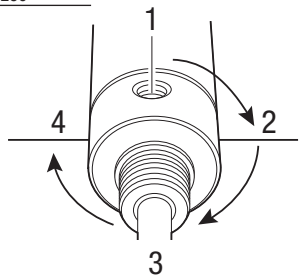

PC - Side ported end cap (DAN and SAN models only)

Port will be on the side of the end cap and in line with the head end port. Overall length of the cylinder will increase.
Change in overall length due to the PC option.

Bore	Length Increase
5/16"	0.2
7/16"	0.19
9/16"	0.03
3/4"	0.44
7/8"	0.28
1-1/16"	0.25
1-1/4"	0.31
1-1/2"	0.19
1-3/4"	0.56
2"	0.38
2-1/2"	0.38
3"	0.44

PS - Magnetic Piston

A magnet on the piston may increase the length of the cylinder. See chart below for length adders.

Bore	Increase in cylinder length with the PS option		
	Single & Reverse Acting	Double Acting	Double Rod End
5/16"	0.150	0.150	N/A
7/16"	0.200	0.250	0.250
9/16"	0.125	0	0
3/4"	0.125	0	0
7/8"	0.125	0.125	0.125
1-1/16"	0.125	0	0.125**
1-1/4"	0.125	0	0
1-1/2"	0.125	0	0
1-3/4"	0.125	0	0
2"	0.125	0	0
2-1/2"	-	0	0
3"	-	0	0

* When the UB and PS options are in combination on an 1-1/16" bore, double rod end, only the bumper length should be added. All other models and bore sizes should add the UB length and the PS length together.

** Ecology piston seal adds .375" to the overall length when combined with PS option on the 1-1/16" bore DRD model only.

Rail shown at position M2

M1,M2,M3,M4 - Switch rail mounted and position

Switch rail will be mounted in position #1 for M1 option, Position #2 for M2 option, etc. Must also reference the PS option in the cylinder model number to receive a magnet on the piston.

A band style swtich bracket can be ordered as a separate item instead of the switch rail. See switch section for band style bracket information.

Switches ordered as separate items.

FT(__) - Female thread

Specify thread type in parentheses. Female rod thread available on 1-3/4", 2", 2-1/2", 3" bores.

NORGREN ENGINEERING ADVANTAGE

Roundline Plus Stainless Steel Body Actuators

Dimensions in inches

Double Acting (DAN) — Nose Mount

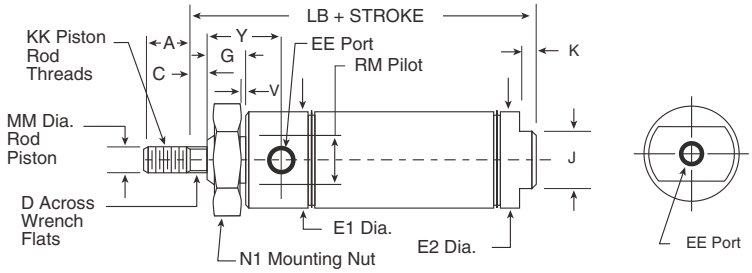

Bore	A	C	D	EE	E1	E2	G	J	K	KK	LB	MM	N1	RM	Y	V
5/16"	0.38	N/A	N/A	10-32	0.61	0.36	0.31	0.36	N/A	5-40	1.64	0.125	3/8-24	.371/.373	0.47	0.03
7/16"	0.50	N/A	N/A	10-32	0.74	0.50	0.38	0.38	0.19	10-32	2.12	0.187	7/16-20	.434/.437	0.72	0.05
9/16"	0.50	N/A	N/A	10-32	0.62	0.62	0.38	0.50	0.19	10-32	2.28	0.187	7/16-20	.434/.437	0.75	0.06
3/4"	0.50	N/A	N/A	1/8 NPT	0.86	0.81	0.50	0.62	0.19	1/4-28	2.97	0.250	5/8-18	.621/.624	0.97	0.09
7/8"	0.50	N/A	N/A	1/8 NPT	0.94	0.94	0.50	0.62	0.19	1/4-28	2.94	0.250	5/8-18	.621/.624	0.97	0.09
1-1/16"	0.50	N/A †	N/A	1/8 NPT	1.12	1.12	0.50	0.88	0.19	5/16-24	3.12	0.312	5/8-18	.621/.624	1.06	0.09
1-1/4"	0.75	0.25	0.38	1/8 NPT	1.34	1.34	0.63	0.88	0.25	7/16-20	4.00	0.437	3/4-16	.746/.749	1.37	0.09
1-1/2"	0.75	0.25	0.38	1/8 NPT	1.56	1.56	0.63	0.88	0.25	7/16-20	3.69	0.437	3/4-16	.746/.749	1.25	0.09
1-3/4"	0.88	0.31	0.44	1/4 NPT	1.84	1.84	0.75	1.25	0.25	1/2-20	4.69	0.500	1-14	1.029/1.032	1.63	0.09
2"	0.88	0.38	0.50	1/4 NPT	2.08	2.08	0.81	1.25	0.31	1/2-20	4.69	0.625	1-1/4-12	1.372/1.375	1.46	0.12
2-1/2"	0.88	0.38	0.50	1/4 NPT	2.59	2.59	0.81	1.75	0.31	1/2-20	4.69	0.625	1-3/8-12	1.497/1.500	1.46	0.12
3"	1.25	0.38	0.63	3/8 NPT	3.12	3.12	1.00	2.00	0.31	5/8-18	5.25	0.750	1-1/2-12	1.622/1.625	1.71	0.19

† 1-1/16 bore with SS or PS option, C = 0.12 and D = 0.25. To remove the flats and plain rod stick out, specify NF in the model number.

Double Acting (DAP) — Pivot Mount

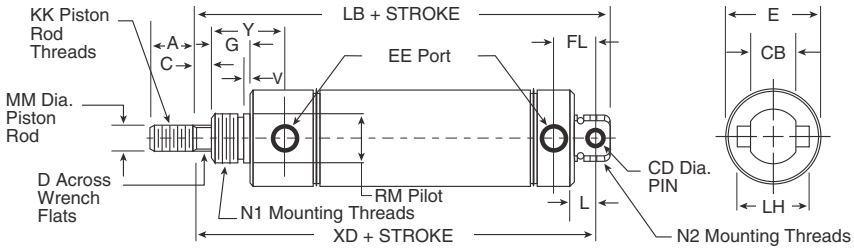

Bore	A	C	CB	CD	D	E	EE	FL	G	KK	L	LB	LH	MM	N1	N2	RM	V	XD	Y
5/16"*	0.38	N/A	0.25	0.125	N/A	0.61	10-32	0.34	0.31	5-40	0.19	2.19	0.39	0.125	3/8-24	3/8-24	.371/.373	0.03	2.03	0.47
7/16"	0.50	N/A	0.31	0.156	N/A	0.74	10-32	0.44	0.38	10-32	0.25	2.81	0.50	0.187	7/16-20	7/16-20	.434/.437	0.05	2.56	0.72
9/16"*	0.50	N/A	0.31	0.156	N/A	0.62	10-32	0.38	0.38	10-32	0.25	2.75	0.50	0.187	7/16-20	7/16-20	.434/.437	0.06	2.56	0.75
3/4"	0.50	N/A	0.38	0.250	N/A	0.86	1/8 NPT	0.62	0.50	1/4-28	0.34	4.03	0.75	0.250	5/8-18	5/8-18	.621/.624	0.09	3.75	0.97
7/8"	0.50	N/A	0.38	0.250	N/A	0.94	1/8 NPT	0.62	0.50	1/4-28	0.34	3.84	0.75	0.250	5/8-18	5/8-18	.621/.624	0.09	3.56	0.97
1-1/16"	0.50	0.12	0.38	0.250	0.25	1.12	1/8 NPT	0.62	0.50	5/16-24	0.34	4.12	0.75	0.312	5/8-18	5/8-18	.621/.624	0.09	3.84	1.07
1-1/4"	0.75	0.25	0.50	0.250	0.38	1.34	1/8 NPT	0.78	0.63	7/16-20	0.41	5.12	0.88	0.437	3/4-16	3/4-16	.746/.749	0.09	4.72	1.37
1-1/2"	0.75	0.25	0.62	0.375	0.38	1.56	1/8 NPT	0.81	0.63	7/16-20	0.50	4.75	1.00	0.437	3/4-16	3/4-16	.746/.749	0.09	4.38	1.25
1-3/4"	0.88	0.31	0.62	0.376	0.44	1.84	1/4 NPT	1.12	0.75	1/2-20	0.50	6.25	1.00	0.500	1-14	1-14	1.029/1.032	0.09	5.75	1.63
2"*	0.88	0.38	0.75	0.375	0.50	2.08	1/4 NPT	1.03	0.81	1/2-20	0.56	6.06	1.63	0.625	1-1/4-12	1-1/4-12	1.372/1.375	0.12	5.62	1.54
2-1/2"*	0.88	0.38	0.75	0.375	0.50	2.59	1/4 NPT	1.03	0.81	1/2-20	0.56	6.06	1.63	0.625	1-3/8-12	1-3/8-12	1.497/1.500	0.12	5.62	1.47
3"*	1.25	0.38	0.88	0.500	0.63	3.12	3/8 NPT	1.34	1.00	5/8-18	0.81	7.12	1.90	0.750	1-1/2-12	1-1/2-12	1.622/1.625	0.19	6.50	1.71

* Pivot bushing included

Norgren.com/usa – 303.794.2611 – help@amer.norgren.com

Roundline Plus Stainless Steel Body Actuators

Dimensions in inches

Double Acting (DAD) — Double End Mount

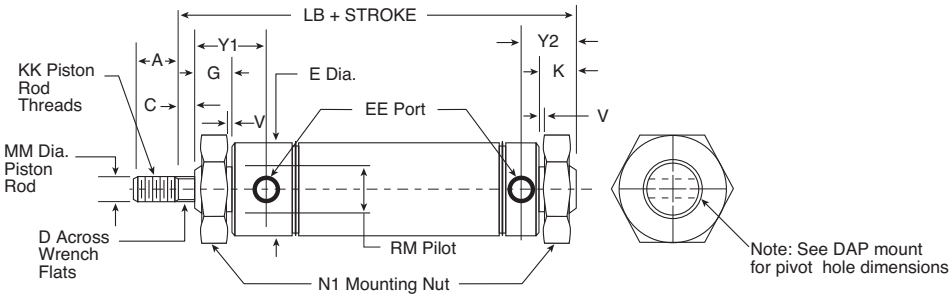

Bore	A	C	D	E	EE	G	K	KK	LB	MM	N1	RM	V	Y1	Y2
5/16"*	0.38	N/A	N/A	0.61	10-32	0.31	0.35	5-40	2.19	0.125	3/8-24	.371/.373	0.03	0.47	0.50
7/16"	0.50	N/A	N/A	0.74	10-32	0.38	0.50	10-32	2.81	0.187	7/16-20	.434/.437	0.05	0.73	0.69
9/16"*	0.50	N/A	N/A	0.62	10-32	0.38	0.44	10-32	2.75	0.187	7/16-20	.434/.437	0.06	0.75	0.57
3/4"	0.50	N/A	N/A	0.86	1/8 NPT	0.50	0.62	1/4-28	4.03	0.250	5/8-18	.621/.624	0.09	0.97	0.90
7/8"	0.50	N/A	N/A	0.94	1/8 NPT	0.50	0.62	1/4-28	3.84	0.250	5/8-18	.621/.624	0.09	0.97	0.90
1-1/16"	0.50	0.12	0.25	1.12	1/8 NPT	0.50	0.62	5/16-24	4.12	0.312	5/8-18	.621/.624	0.09	1.07	0.90
1-1/4"	0.75	0.25	0.38	1.34	1/8 NPT	0.63	0.81	7/16-20	5.12	0.437	3/4-16	.746/.749	0.09	1.37	1.18
1-1/2"	0.75	0.25	0.38	1.56	1/8 NPT	0.63	0.88	7/16-20	4.75	0.437	3/4-16	.746/.749	0.09	1.25	1.18
1-3/4"	0.88	0.31	0.44	1.84	1/4 NPT	0.75	1.00	1/2-20	6.25	0.500	1-14	1.029/1.032	0.09	1.63	1.62
2"*	0.88	0.38	0.50	2.08	1/4 NPT	0.81	1.00	1/2-20	6.06	0.625	1-1/4-12	1.372/1.375	0.12	1.46	1.47
2-1/2"*	0.88	0.38	0.50	2.59	1/4 NPT	0.81	1.00	1/2-20	6.06	0.625	1-3/8-12	1.497/1.500	0.12	1.46	1.47
3"*	1.25	0.38	0.63	3.12	3/8 NPT	1.00	1.43	5/8-18	7.12	0.750	1-1/2-12	1.622/1.625	0.19	1.71	1.96

* Pivot bushing included

Double Acting (DAF) — Front Block Mount

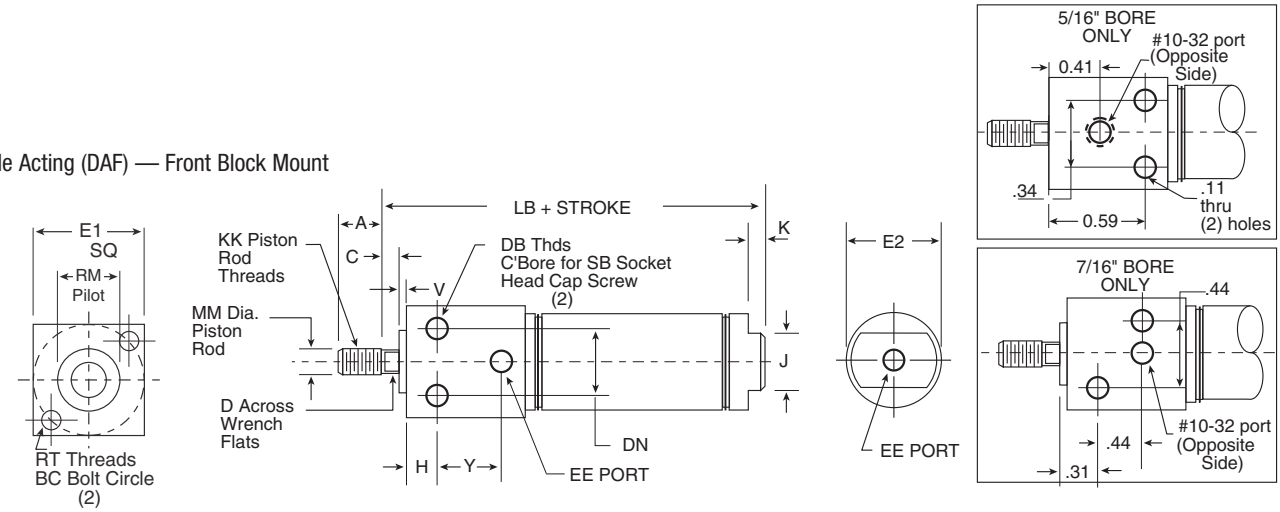

Bore	A	BC	C	D	DB	DN	EE	E1	E2	H	J	K	KK	LB	MM	RM	RT	SB	V	Y
5/16"	0.38	N/A	N/A	N/A	N/A	N/A	10-32	0.50	0.36	N/A	N/A	N/A	5-40	1.72	0.125	N/A	N/A	N/A	N/A	N/A
7/16"	0.50	0.75	N/A	N/A	8-32	N/A	10-32	0.75	0.50	N/A	0.38	0.19	10-32	2.12	0.187	0.437	8-32	N/A	0.06	N/A
3/4"	0.75	1.00	0.25	0.22	1/4-20	0.62	1/8 NPT	1.00	0.81	0.38	0.62	0.19	1/4-28	3.22	0.250	0.625	10-32	#10	0.09	0.50
1-1/16"	0.75	1.25	0.38	0.25	1/4-20	0.81	1/8 NPT	1.25	1.12	0.62	0.88	0.19	5/16-24	3.75	0.312	0.75	10-32	#10	0.09	0.54
1-1/2"	1.25	1.75	0.25	0.38	5-16-18	1.12	1/4 NPT	1.75	1.56	0.88	0.88	0.25	7/16-20	4.19	0.437	1.00	1/4-20	1/4	0.13	0.65

NORGREN ENGINEERING ADVANTAGE

Roundline Plus Stainless Steel Body Actuators

Dimensions in inches

Double Acting (DAR) — Rear Block Mount

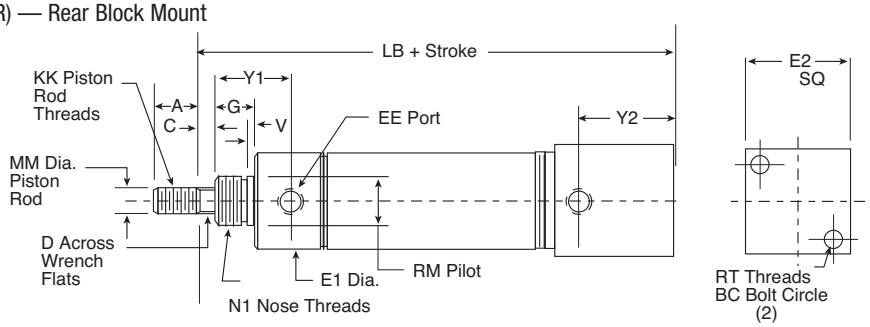

Bore	A	C	D	E1	E2	EE	G	KK	LB	MM	N1	RM	RT	BC	V	Y1	Y2
7/16"	0.50	N/A	N/A	0.75	0.75	10-32	0.38	10-32	2.44	0.187	7/16-20	.433/.437	8-32	0.75	0.05	0.72	0.34
3/4"	0.75	0.25	0.22	0.86	1.00	1/8 NPT	0.50	1/4-28	3.78	0.250	5/8-18	.621/.624	10-32	1.00	0.09	0.97	0.44
1-1/16"	0.75	0.38	0.25	1.12	1.25	1/8 NPT	0.50	5/16-24	4.00	0.312	5/8-18	.621/.624	10-32	1.25	0.09	1.06	1.25
1-1/2"	1.25	0.25	0.38	1.56	1.75	1/4 NPT	0.63	7/16-20	4.38	0.437	3/4-16	.746/.749	1/4-20	1.75	0.09	1.25	0.62

Double Acting (DFT) — Front Trunnion Mount

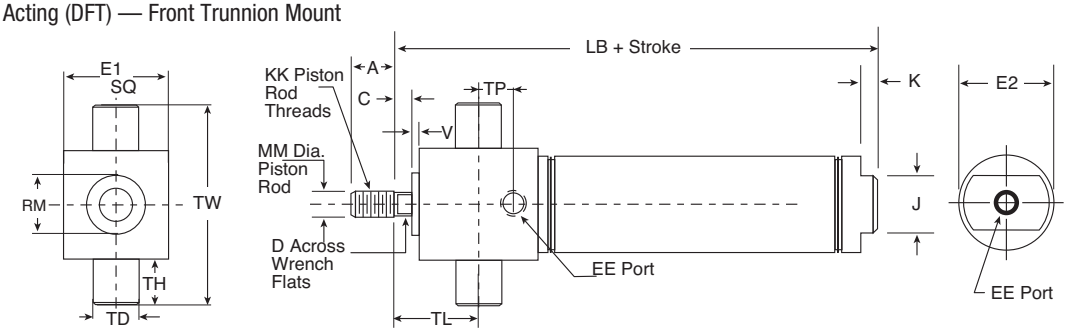

Bore	A	C	D	E1	E2	EE	J	K	KK	LB	MM	RM	TD	TH	TL	TP	TW	V
7/16"	0.50	N/A	N/A	0.75	0.50	10-32	0.38	0.19	10-32	2.12	0.187	0.44	0.374	0.25	0.31	0.41	1.25	0.06
3/4"	0.75	0.25	0.22	1.00	0.81	1/8 NPT	0.62	0.19	1/4-28	3.22	0.250	0.62	0.500	0.38	0.69	0.53	1.75	0.09
1-1/16"	0.75	0.38	0.25	1.25	1.12	1/8 NPT	0.88	0.19	5/16-24	3.75	0.312	0.75	0.500	0.38	1.09	0.53	2.00	0.09
1-1/2"	1.25	0.25	0.38	1.75	1.56	1/4 NPT	0.88	0.25	7/16-20	4.19	0.437	1.00	0.500	0.38	1.19	0.59	2.50	0.12

Double Acting (DRT) — Rear Trunnion Mount

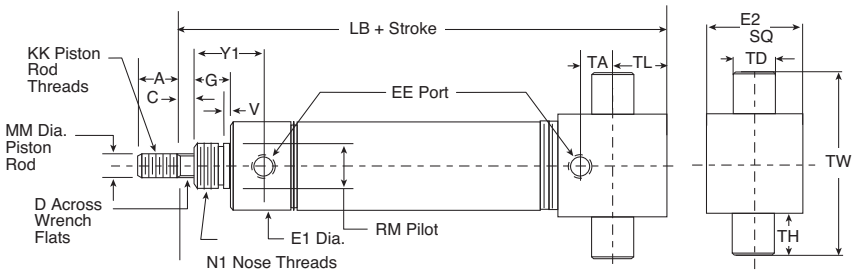

Bore	A	C	D	E1	E2	EE	G	KK	LB	MM	N1	RM	TA	TD	TH	TL	TW	V	Y1
7/16"	0.50	N/A	N/A	0.75	0.75	10-32	0.38	10-32	2.44	0.187	7/16-20	.433/.437	0.09	0.374	0.25	0.25	1.25	0.05	0.72
3/4"	0.75	0.25	0.22	0.86	1.00	1/8 NPT	0.50	1/4-28	3.78	0.250	5/8-18	.621/.624	0.06	0.500	0.38	0.38	1.75	0.09	0.97
1-1/16"	0.75	0.38	0.25	1.12	1.25	1/8 NPT	0.50	5/16-24	4.00	0.312	5/8-18	.621/.624	0.06	0.500	0.38	0.38	2.00	0.07	1.06
1-1/2"	1.25	0.25	0.38	1.56	1.75	1/4 NPT	0.63	7/16-20	4.38	0.437	3/4-16	.746/.749	0.12	0.500	0.38	0.50	2.50	0.09	1.25

Norgren.com/usa – 303.794.2611 – help@amer.norgren.com

Roundline Plus Stainless Steel Body Actuators

Dimensions in inches

Double Acting Double Rod End (DRD) — Double End Mount

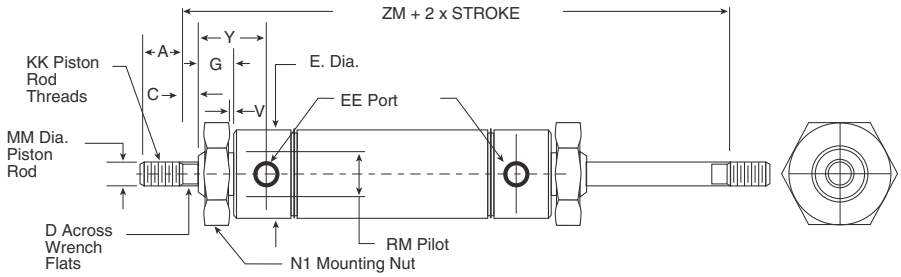

Bore	A	C	D	E	EE	G	KK	MM	N1	RM	V	Y	ZM
7/16"	0.50	N/A	N/A	0.74	10-32	0.38	10-32	0.187	7/16-20	.434/.437	0.05	0.72	2.81
9/16"	0.50	N/A	N/A	0.62	10-32	0.38	10-32	0.187	7/16-20	.434/.437	0.06	0.75	2.94
3/4"	0.50	N/A	N/A	0.86	1/8 NPT	0.50	1/4-28	0.250	5/8-18	.621/.624	0.09	0.97	4.00
7/8"	0.50	N/A	N/A	0.94	1/8 NPT	0.50	1/4-28	0.250	5/8-18	.621/.624	0.09	0.97	3.91
1-1/16"	0.50	0.12	0.25	1.12	1/8 NPT	0.50	5/16-24	0.312	5/8-18	.621/.624	0.09	1.06	4.00
1-1/4"	0.75	0.25	0.38	1.34	1/8 NPT	0.63	7/16-20	0.437	3/4-16	.746/.749	0.09	1.37	5.56
1-1/2"	0.75	0.25	0.38	1.56	1/8 NPT	0.63	7/16-20	0.437	3/4-16	.746/.749	0.09	1.25	5.12
1-3/4"	0.88	0.31	0.44	1.84	1/4 NPT	0.75	1/2-20	0.500	1-14	1.029/1.032	0.09	1.94	6.56
2"	0.88	0.38	0.50	2.08	1/4 NPT	0.81	1/2-20	0.625	1-1/4-12	1.372/1.375	0.12	1.46	6.56
2-1/2"	0.88	0.38	0.50	2.59	1/4 NPT	0.81	1/2-20	0.625	1-3/8-12	1.497/1.500	0.12	1.46	6.56
3"	1.25	0.38	0.63	3.12	3/8 NPT	1.00	5/8-18	0.750	1-1/2-12	1.622/1.625	0.19	1.71	7.31

Single Acting Spring Return (SAN) — Nose Mount

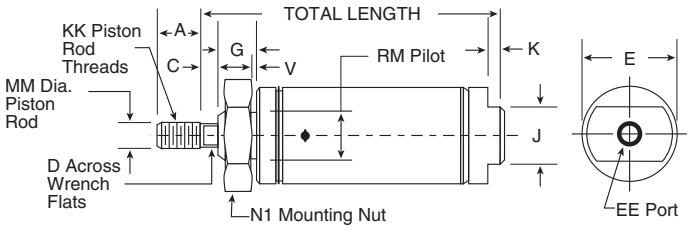

Bore	A	C	D	E	EE	G	J	K	KK	MM	N1	RM	V	Total Length
5/16"	0.38	N/A	N/A	0.36	10-32	0.25	N/A	N/A	5-40	0.125	1/4-28	.309/.312	0.03	1.12 + (0.75 per 1/2" of stroke)
7/16"	0.50	N/A	N/A	0.50	10-32	0.31	0.38	0.19	10-32	0.187	3/8-24	.369/.373	0.05	1.31 + (0.94 per 1/2" of stroke)
9/16"	0.50	N/A	N/A	0.62	10-32	0.38	0.50	0.19	10-32	0.187	7/16-20	.434/.437	0.06	1.53 + (1.62 per 1" of stroke)
3/4"	0.50	N/A	N/A	0.81	1/8 NPT	0.44	0.62	0.19	1/4-28	0.250	1/2-20	.494/.498	0.08	1.50 + (1.69 per 1" of stroke)
7/8"	0.50	N/A	N/A	0.94	1/8 NPT	0.50	0.62	0.19	1/4-28	0.250	5/8-18	.621/.624	0.09	1.84 + (1.56 per 1" of stroke)
1-1/16"	0.50	N/A†	N/A	1.12	1/8 NPT	0.50	0.88	0.19	5/16-24	0.312	5/8-18	.621/.624	0.07	1.94 + (1.56 per 1" of stroke)
1-1/4"	0.75	0.25	0.38	1.34	1/8 NPT	0.63	0.88	0.25	7/16-20	0.437	3/4-16	.746/.749	0.09	2.66 + (1.81 per 1" of stroke)
1-1/2"	0.75	0.25	0.38	1.56	1/8 NPT	0.63	0.88	0.25	7/16-20	0.437	3/4-16	.746/.749	0.09	2.44 + (1.69 per 1" of stroke)
1-3/4"	0.88	0.31	0.44	1.84	1/4 NPT	0.75	1.25	0.25	1/2-20	0.500	1-14	1.029/1.032	0.09	2.97 + (2.00 per 1" of stroke
2"	0.88	0.38	0.50	2.08	1/4 NPT	0.81	1.25	0.31	1/2-20	0.625	1-1/4-12	1.372/1.375	0.12	Consult Factory

† 1-1/16 bore with SS or PS option, C = 0.12 and D = 0.25. To remove the flats and plain rod stick out, specify NF in the model number.

NORGREN
ENGINEERING ADVANTAGE

Roundline Plus Stainless Steel Body Actuators

Dimensions in inches

Single Acting Spring Return (SAP) — Pivot Mount

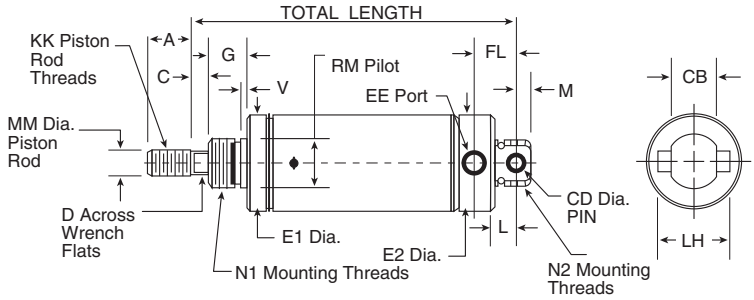

Bore	A	CB	C	CD	D	E1	E2	EE	FL	G	KK	L	LH	M	MM	N1	N2	V	RM	Total Length
5/16"*	0.38	0.25	N/A	0.125	N/A	0.36	0.36	10-32	0.34	0.25	5-40	0.19	N/A	0.16	0.125	1/4-28	3/8-24	0.03	.245/.249	1.52 + (.75 per 1/2" of stroke)
7/16"	0.50	0.31	N/A	0.156	N/A	0.50	0.74	10-32	0.44	0.31	10-32	0.25	0.50	0.25	0.187	3/8-24	7/16-20	0.05	.369/.373	1.75 + (.94 per 1/2" of stroke)
9/16"*	0.50	0.31	N/A	0.156	N/A	0.62	0.62	10-32	0.38	0.38	10-32	0.25	N/A	0.19	0.187	7/16-20	7/16-20	0.06	.434/.437	1.81 + (1.62 per 1" of stroke)
3/4"	0.50	0.38	N/A	0.250	N/A	0.81	0.86	1/8 NPT	0.62	0.44	1/4-28	0.34	0.75	0.28	0.250	1/2-20	5/8-18	0.08	.494/.498	2.28 + (1.69 per 1" of stroke)
7/8"	0.50	0.38	N/A	0.250	N/A	0.94	0.94	1/8 NPT	0.62	0.50	1/4-28	0.34	0.75	0.28	0.250	5/8-18	5/8-18	0.09	.621/.624	2.47 + (1.56 per 1" of stroke)
1-1/16"	0.50	0.38	0.12	0.250	0.25	1.12	1.12	1/8 NPT	0.62	0.50	5/16-24	0.34	0.75	0.28	0.312	5/8-18	5/8-18	0.07	.621/.624	2.66 + (1.56 per 1" of stroke)
1-1/4"	0.75	0.50	0.25	0.250	0.38	1.34	1.34	1/8 NPT	0.78	0.63	7/16-20	0.41	N/A	0.40	0.437	3/4-16	3/4-16	0.09	.746/.749	3.38 + (1.81 per 1" of stroke)
1-1/2"	0.75	0.62	0.25	0.375	0.38	1.56	1.56	1/8 NPT	0.81	0.63	7/16-20	0.50	N/A	0.38	0.437	3/4-16	3/4-16	0.09	.746/.749	3.12 + (1.69 per 1" of stroke)
1-3/4"	0.88	0.62	0.31	0.375	0.44	1.84	1.84	1/4 NPT	1.12	1.06	1/2-20	0.50	N/A	0.50	0.500	1-14	1-14	0.09	1.029/1.032	4.03 + (2.00 [per 1" of stroke)
2"*	0.88	0.75	0.38	0.375	0.50	2.08	2.08	1/4 NPT	1.03	0.81	1/2-20	0.56	N/A	0.44	0.625	1-1/4-12	1-1/4-12	0.12	1.372/1.375	Consult Factory

* Pivot bushing included

Single Acting Spring Return (SBF) — Front Block Mount

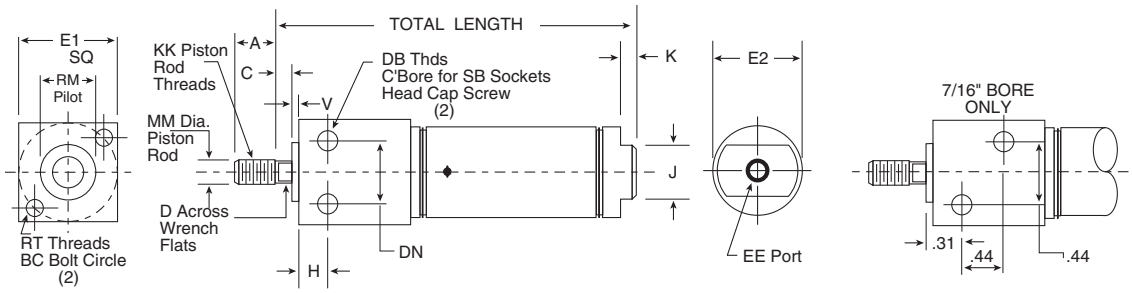

Bore	A	BC	C	D	DB	DN	E1	E2	EE	H	J	K	KK	MM	RM	RT	SB	V	Total Length
7/16"	0.50	0.75	N/A	N/A	8-32	N/A	0.75	0.50	10-32	N/A	0.38	0.19	10-32	0.187	0.44	8-32	N/A	0.06	1.94 + (.94 per 1/2" of stroke)
3/4"	0.75	1.00	0.25	0.22	1/4-20	0.62	1.00	0.81	1/8 NPT	0.38	0.62	0.19	1/4-28	0.250	0.63	10-32	#10	0.09	2.66 + (1.69 per 1" of stroke)
1-1/16"	0.75	1.25	0.38	0.25	1/4-20	0.81	1.25	1.12	1/8 NPT	0.62	0.88	0.19	5/16-24	0.312	0.75	10-32	#10	0.09	3.38 + (1.81 per 1" of stroke)
1-1/2"	1.25	1.75	0.25	0.38	5/16-18	1.12	1.75	1.56	1/4 NPT	0.88	0.88	0.25	7/16-20	0.437	1.00	1/4-20	1/4	0.13	3.69 + (2.00 per 1" of stroke)

Single Acting Spring Return (SBR) — Rear Block Mount

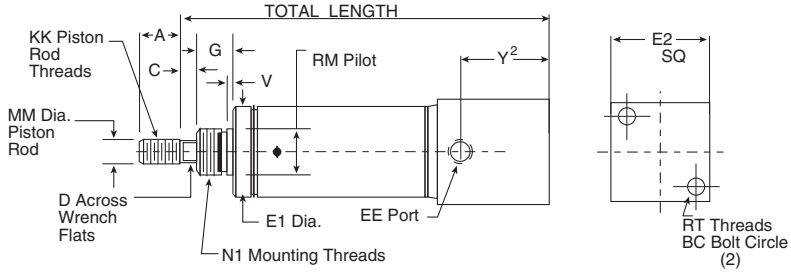

Bore	A	BC	C	D	E1	E2	EE	G	KK	MM	N1	RM	RT	V	Y2	Total Length
7/16"	0.50	0.75	N/A	N/A	0.50	0.75	10-32	0.31	10-32	0.187	3/8-24	.369/.373	8-32	0.05	0.34	1.62 + (0.94 per 1/2" of stroke)
3/4"	0.75	1.00	0.25	0.22	0.81	1.00	1/8 NPT	0.44	1/4-28	0.250	1/2-20	.494/.498	10-32	0.08	0.44	2.31 + (1.69 per 1" of stroke)
1-1/16"	0.75	1.25	0.25	0.25	1.12	1.25	1/8 NPT	0.50	5/16-24	0.312	5/8-18	.621/.624	10-32	0.07	0.44	2.81 + (1.81 per 1" of stroke)
1-1/2"	1.25	1.75	0.25	0.38	1.56	1.75	1/8 NPT	0.63	7/16-20	0.437	3/4-16	.746/.749	1/4-20	0.09	0.62	3.06 + (2.00 per 1" of stroke)

Norgren.com/usa – 303.794.2611 – help@amer.norgren.com

Roundline Plus Stainless Steel Body Actuators

Dimensions in inches

Single Acting Spring Return (STF) — Front Trunnion Mount

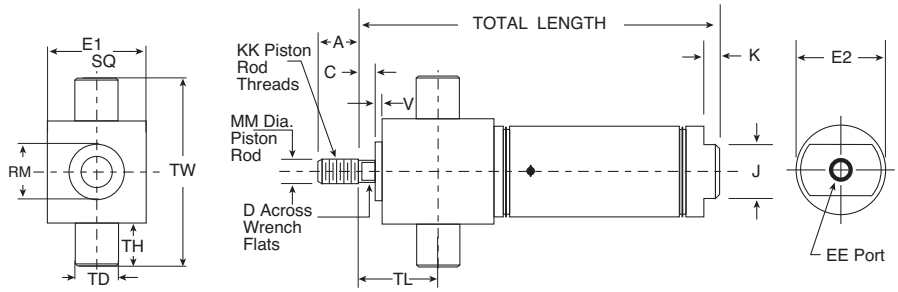

Bore	A	C	D	E1	E2	EE	J	K	KK	MM	RM	TD	TH	TL	TW	V	Total Length
7/16"	0.50	N/A	N/A	0.75	0.50	10-32	0.38	0.19	10-32	0.187	0.44	0.37	0.25	0.31	1.25	0.05	1.94 + (0.94 per 1/2" of stroke)
3/4"	0.75	0.25	0.22	1.00	0.81	1/8 NPT	0.62	0.19	1/4-28	0.250	0.62	0.50	0.38	0.69	1.75	0.09	2.66 + (1.69 per 1" of stroke)
1-1/16"	0.75	0.25	0.25	1.25	1.12	1/8 NPT	0.88	0.19	5/16-24	0.312	0.75	0.50	0.38	0.97	2.00	0.09	3.38 + (1.81 per 1" of stroke)
1-1/2"	1.25	0.25	0.38	1.75	1.56	1/4 NPT	0.88	0.25	7/16-20	0.437	1.00	0.50	0.38	1.19	2.50	0.12	3.69 + (2.00 per 1" of stroke)

Single Acting Spring Return (STR) — Rear Trunion Mount

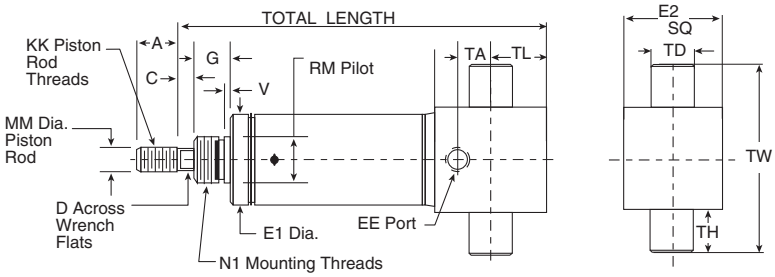

Bore	A	C	D	E1	E2	EE	G	KK	MM	N1	RM	TA	TD	TH	TL	TW	V	Total Length
7/16"	0.50	N/A	N/A	0.50	0.75	10-32	0.31	10-32	0.187	3/8-24	.370/.375	0.09	0.37	0.25	0.25	1.25	0.05	1.62 + (0.94 per 1/2" of stroke)
3/4"	0.75	0.25	0.22	0.81	1.00	1/8 NPT	0.69	1/4-28	0.250	1/2-20	.494/.498	0.06	0.50	0.38	0.38	1.75	0.08	2.31 + (1.69 per 1" of stroke)
1-1/16"	0.75	0.25	0.38	1.12	1.25	1/8 NPT	0.75	5/16-24	0.312	5/8-18	.621/.624	0.06	0.50	0.38	0.38	2.00	0.07	2.81 + (1.81 per 1" of stroke)
1-1/2"	1.25	0.25	0.38	1.56	1.75	1/4 NPT	0.88	7/16-20	0.437	3/4-16	.746/.749	0.12	0.50	0.38	0.50	2.50	0.06	3.06+ (2.00 per 1" of stroke)

Single Acting Non-Rotating (NRN) — Nose Mount

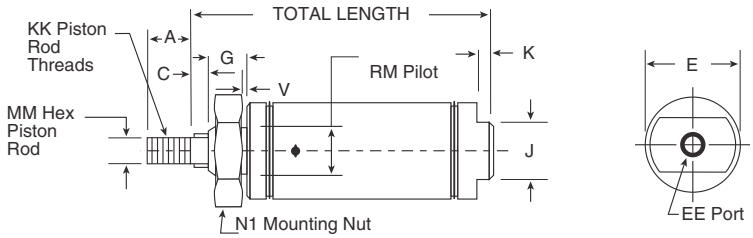

Bore	A	C	E	EE	G	J	K	KK	MM (hex)	N1	RM	V	Total Length
7/16"	0.50	0.25	0.50	10-32	0.31	0.38	0.19	10-32	0.187	3/8-24	.369/.373	0.05	1.56 + (.94 per 1/2" of stroke)
9/16"	0.50	0.25	0.62	10-32	0.38	0.50	0.19	10-32	0.187	7/16-20	.434/.437	0.06	1.78 + (1.62 per 1" of stroke
3/4"	0.50	0.25	0.81	1/8 NPT	0.44	0.62	0.19	1/4-28	0.250	1/2-20	.494/.498	0.08	1.75 + (1.69 per 1" of stroke)
7/8"	0.50	0.25	0.94	1/8 NPT	0.50	0.62	0.19	1/4-28	0.250	5/8-18	.621/.624	0.09	2.09 + (1.56 per 1" of stroke)
1-1/16"	0.50	0.25	1.12	1/8 NPT	0.50	0.88	0.19	5/16-24	0.375	5/8-18	.621/.624	0.07	2.19 + (1.56 per 1" of stroke)
1-1/4"	0.88	0.25	1.34	1/8 NPT	0.63	0.88	0.25	7/16-20	0.437	3/4-16	.746/.749	0.09	2.66 + (1.81 per 1" of stroke)
1-1/2"	0.88	0.25	1.56	1/8 NPT	0.63	0.88	0.25	7/16-20	0.437	3/4-16	.746/.749	0.09	2.44 + (1.69 per 1" of stroke)
1-3/4"	0.88	0.38	1.84	1/4 NPT	0.74	1.25	0.25	1/2-20	0.500	1-14	1.029/1.032	0.09	3.03 + (2.00 per 1" of stroke)

NORGREN ENGINEERING ADVANTAGE

Roundline Plus Stainless Steel Body Actuators

Dimensions in inches

Single Acting Non-Rotating (NRP) — Pivot Mount

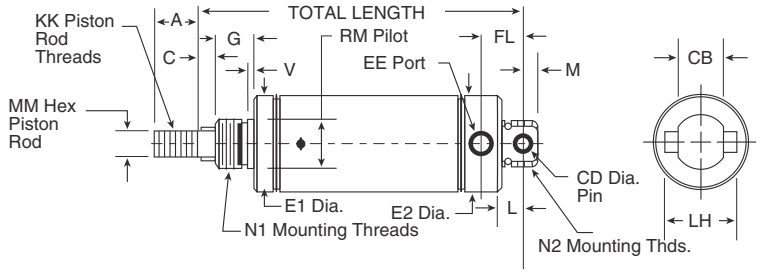

Bore	A	C	CB	CD	E1	E2	EE	FL	G	KK	L	LH	M	MM (hex)	N1	N2	RM	V	Total Length
7/16"	0.50	0.25	0.31	0.156	0.50	0.74	10-32	0.44	0.31	10-32	0.25	0.50	0.25	0.187	3/8-24	7/16-20	.369/.373	0.05	2.00 + (.94 per 1/2" of stroke)
9/16"*	0.50	0.25	0.31	0.156	0.62	0.62	10-32	0.38	0.38	10-32	0.25	N/A	0.19	0.187	7/16-20	7/16-20	.434/.437	0.06	2.06 + (1.62 per 1" of stroke)
3/4"	0.50	0.25	0.38	0.250	0.81	0.86	1/8 NPT	0.62	0.44	1/4-28	0.34	0.75	0.28	0.250	1/2-20	5/8-18	.494/.498	0.08	2.53 + (1.69 per 1" of stroke)
7/8"	0.50	0.25	0.38	0.250	0.94	0.94	1/8 NPT	0.62	0.50	1/4-28	0.34	0.75	0.28	0.250	5/8-18	5/8-18	.621/.624	0.09	2.72 + (1.56 per 1" of stroke)
1-1/16"	0.50	0.25	0.38	0.250	1.12	1.12	1/8 NPT	0.62	0.50	5/16-24	0.34	0.75	0.28	0.375	5/8-18	5/8-18	.621/.624	0.07	2.78 + (1.56 per 1" of stroke)
1-1/4"	0.88	0.25	0.50	0.250	1.34	1.34	1/8 NPT	0.78	0.63	7/16-20	0.41	0.88	0.40	0.437	3/4-16	3/4-16	.746/.749	0.09	3.38 + (1.81 per 1" of stroke)
1-1/2"	0.88	0.38	0.62	0.375	1.56	1.56	1/8 NPT	0.81	0.63	7/16-20	0.50	1.00	0.37	0.437	3/4-16	3/4-16	.746/.749	0.09	3.25 + (1.69 per 1" of stroke)
1-3/4"	0.88	0.38	0.62	0.375	1.84	1.84	1/4 NPT	1.12	0.74	1/2-20	0.50	N/A	0.50	0.500	1-14	1-14	1.029/1.032	0.09	4.09 + (2.00 per 1" of stroke)

* Pivot bushing included

Reverse Acting Spring Extend (RAN) — Nose Mount

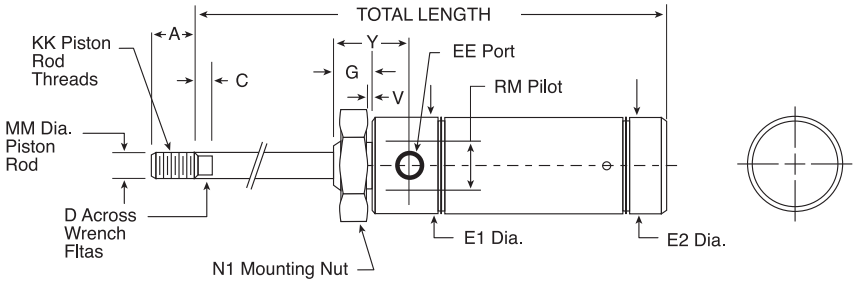

Bore	A	C	D	E1	E2	EE	G	KK	MM	N1	RM	V	Y	Total Length
5/16"	0.38	N/A	N/A	0.61	0.36	10-32	0.31	5-40	0.125	3/8-24	.371/.373	0.03	0.47	1.49 + (1.25 per 1/2" of stroke)
7/16"	0.50	N/A	N/A	0.74	0.50	10-32	0.38	10-32	0.187	7/16-20	.434/.437	0.05	0.72	1.94 + (1.44 per 1/2" of stroke)
9/16"	0.50	N/A	N/A	0.62	0.62	10-32	0.38	10-32	0.187	7/16-20	.434/.437	0.06	0.75	2.00 + (2.62 per 1" of stroke)
3/4"	0.50	N/A	N/A	0.86	0.81	1/8 NPT	0.50	1/4-28	0.250	5/8-18	.621/.624	0.09	0.97	2.31 + (2.69 per 1" of stroke)
7/8"	0.50	N/A	N/A	0.94	0.94	1/8 NPT	0.50	1/4-28	0.250	5/8-18	.621/.624	0.09	0.97	2.31 + (2.56 per 1" of stroke)
1-1/16"	0.50	0.12	0.25	1.12	1.12	1/8 NPT	0.50	5/16-24	0.312	5/8-18	.621/.624	0.09	1.06	2.62 + (2.81 per 1" of stroke)
1-1/4"	0.75	0.25	0.38	1.34	1.34	1/8 NPT	0.63	7/16-20	0.437	3/4-16	.746/.749	0.09	1.37	3.47 + (2.81 per 1" of stroke)
1-1/2"	1.25	0.25	0.38	1.56	1.56	1/8 NPT	0.63	7/16-20	0.437	3/4-16	.746/.749	0.09	1.25	3.19 + (3.00 per 1" of stroke)
1-3/4"	0.88	0.31	0.44	1.84	1.84	1/4 NPT	0.75	1/2-20	0.500	1-14	1.029/1.032	0.09	1.62	4.03 + (3.00 per 1" of stroke)
2"	0.88	0.38	0.50	2.08	2.08	1/4 NPT	0.81	1/2-20	0.625	1-1/4-12	1.372/1.375	0.12	1.46	Consult Factory

Norgren.com/usa – 303.794.2611 – help@amer.norgren.com

Roundline Plus Stainless Steel Body Actuators

Dimensions in inches

Reverse Acting Spring Extend (RAP) — Pivot Mount

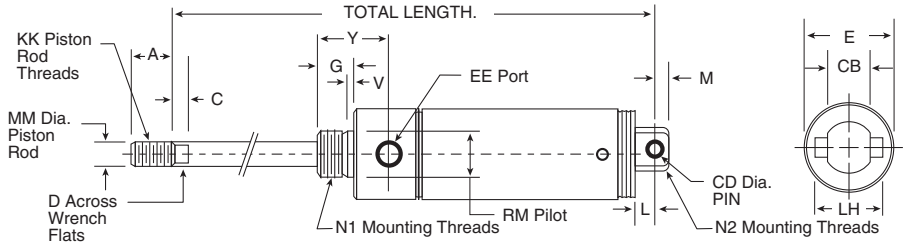

Bore	A	C	CB	CD	D	EE	E	G	KK	L	LH	MM	M	N1	N2	RM	V	Y	Total Length
5/16"*	0.38	N/A	0.25	0.125	N/A	10-32	0.61	0.31	5-40	0.19	N/A	0.125	0.16	3/8-24	3/8-24	.371/.373	0.03	0.47	1.88 + (1.25 per 1/2" of stroke)
7/16"	0.50	N/A	0.31	0.156	N/A	10-32	0.74	0.38	10-32	0.25	0.50	0.187	0.25	7/16-20	7/16-20	.434/.437	0.05	0.72	2.38 + (1.44 per 1/2" of stroke)
9/16"*	0.50	N/A	0.31	0.156	N/A	10-32	0.62	0.38	10-32	0.25	0.50	0.187	0.19	7/16-20	7/16-20	.434/.437	0.06	0.75	2.28 + (2.62 per 1" of stroke)
3/4"	0.50	N/A	0.38	0.250	N/A	1/8 NPT	0.86	0.50	1/4-28	0.34	0.75	0.250	0.28	5/8-18	—	.621/.624	0.09	0.97	2.44 + (2.69 per 1" of stroke)
7/8"	0.50	N/A	0.38	0.250	N/A	1/8 NPT	0.94	0.50	1/4-28	0.34	0.75	0.250	0.28	5/8-18	—	.621/.624	0.09	0.97	2.62 + (2.56 per 1" of stroke)
1-1/16"	0.50	0.12	0.38	0.250	0.25	1/8 NPT	1.12	0.50	5/16-24	0.34	0.75	0.312	0.28	5/8-18	—	.621/.624	0.09	1.06	2.78 + (2.81 per 1" of stroke)
1-1/4"	0.75	0.25	0.50	0.250	0.38	1/8 NPT	1.34	0.63	7/16-20	0.44	0.88	0.437	0.38	3/4-16	3/4-16	.746/.749	0.09	1.37	3.78 + (2.81 per 1" of stroke)
1-1/2"	1.25	0.25	0.62	0.375	0.38	1/8 NPT	1.56	0.63	7/16-20	0.50	1.00	0.437	0.38	3/4-16	3/4-16	.746/.749	0.09	1.25	3.88 + (3.00 per 1" of stroke)
2"*	0.88	0.38	0.75	0.375	0.50	1/4 NPT	2.08	0.81	1/2-20	0.56	1.63	0.625	0.44	1-1/4-12	1-1/4-12	1.372/1.375	0.12	1.46	Consult Factory

* Pivot bushing included

Reverse Acting Spring (RAF) — Front Block Mount

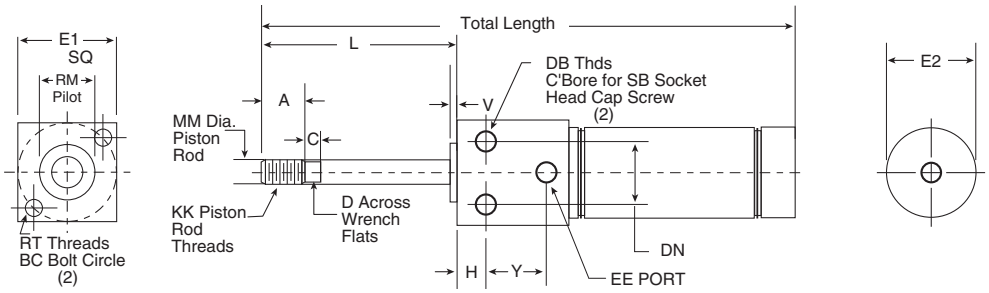

Bore	A	C	D	DB	DN	SB	E1	E2	EE	H	KK	L	MM	RM	RT	BC	V	Y	Total Length
3/4"	0.75	0.25	0.22	1/4-20	0.63	10-32	1.00	0.81	1/8 NPT	0.38	1/4-28	1.09	0.250	0.62	10-32	1.00	0.09	0.5	2.56 + (2.69 per 1" of stroke)
1-1/16"	0.75	0.25	0.38	1/4-20	0.81	10-32	1.25	1.12	1/8 NPT	0.62	5/16-24	1.22	0.312	0.75	10.32	1.25	0.07	0.54	3.12 + (2.81 per 1" of stroke)
1-1/2"	1.25	0.25	0.38	5/16-18	1.12	0.25	1.75	1.56	1/4 NPT	0.88	7/16-20	1.63	0.437	1.00	1/4-20	1.75	0.12	0.65	3.69 + (3.00 per 1" of stroke)

NORGREN
ENGINEERING ADVANTAGE

Roundline Plus Stainless Steel Body Actuators

Dimensions in inches

Reverse Acting Spring (RAR) — Rear Block Mount

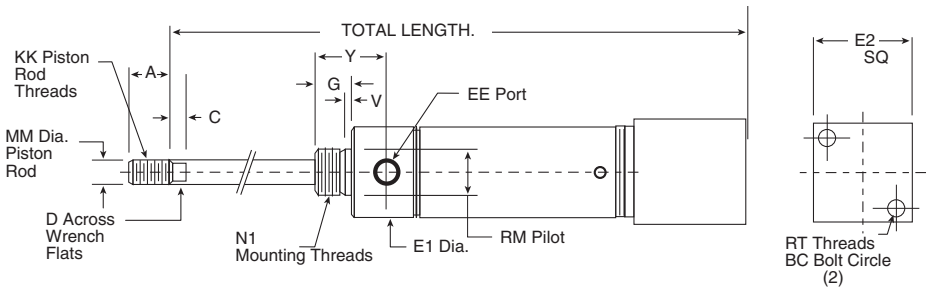

Bore	A	C	D	E1	E2	EE	G	KK	MM	N1	RM	RT	BC	V	Y	Total Length
3/4"	0.75	0.25	0.22	0.86	1.00	1/8 NPT	0.50	1/4-28	0.250	5/8-18	.621/.624	10-32	1.00	0.09	0.97	3.22 + (2.69 per 1" of stroke)
1-1/16"	0.75	0.25	0.25	1.12	1.25	1/8 NPT	0.50	5/16-24	0.312	5/8-18	.621/.624	10-32	1.25	0.09	1.06	3.53 + (2.81 per 1" of stroke)
1-1/2"	1.25	0.25	0.38	1.56	1.75	1/4 NPT	0.62	7/16-20	0.437	3/4-16	.746/.749	1/4-20	1.75	0.09	1.25	3.88 + (3.00 per 1" of stroke)

- All accessories are clear zinc plated carbon steel

Pivot Bracket (without pin)

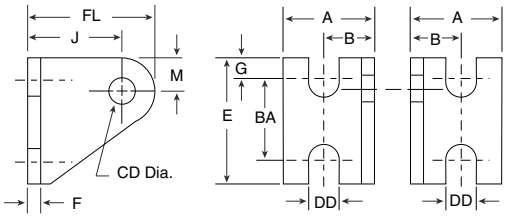

Bore	Part Number	A	B	BA	CD	DD	E	F	FL	G	J	M
7/16", 9/16"	PB-1	0.50	0.28	0.50	0.16	0.19	0.75	0.06	0.77	0.12	0.56	0.20
3/4", 7/8", 1-1/16", 1-1/4"	PB-2	0.81	0.44	0.75	0.25	0.27	1.12	0.12	1.19	0.19	0.88	0.31
1-1/2"	PB-3	1.00	0.62	1.00	0.38	0.27	1.50	0.12	1.75	0.25	1.38	0.38
1-3/4",2", 2-1/2"	PB-4	1.13	0.68	1.00	0.38	0.26	1.50	0.25	1.75	0.25	1.38	0.38
3"	PB-5	1.44	0.88	1.25	0.50	0.27	1.75	0.25	2.25	0.25	1.75	0.50

Pivot Bracket (with pin)

Bore	Part Number
5/16	PB-0
7/16", 9/16"	PB-1K
3/4", 7/8", 1-1/16", 1-1/4"	PB-2K
1-1/2"	PB-3K
1-3/4",2", 2-1/2"	PB-4K
3"	PB-5K

PB-0 (5/16" bore only) (includes pin)

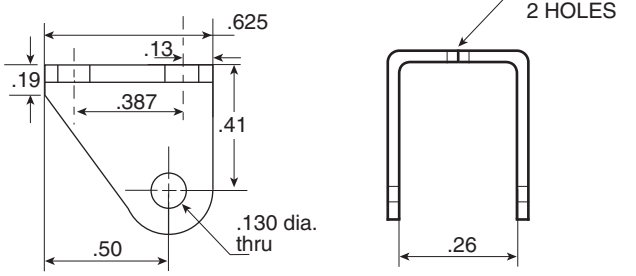

Rod Clevis
(Includes Pin & Jam Nut)

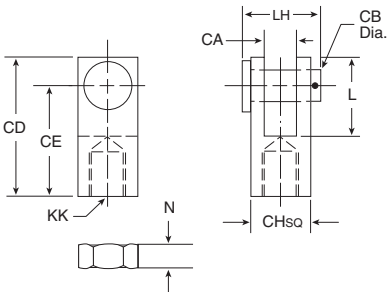

Bore	Part Number	CA	CB dia.	CD	CE	CH	KK	L	LH	N
5/16"	RC-0	0.13	0.13	0.56	0.44	0.31	5-40	0.38	0.5	0.16
7/16", 9/16"	RC-1	0.19	0.19	0.94	0.75	0.38	10-32	0.56	0.66	0.12
3/4", 7/8"	RC-2	0.25	0.25	1.19	0.94	0.50	1/4-28	0.68	0.85	0.16
1-1/16"	RC-3	0.25	0.25	1.19	0.94	0.50	5/16-24	0.69	0.85	0.19
1-1/4", 1-1/2"	RC-4	0.38	0.38	1.69	1.31	0.75	7/16-20	0.94	1.12	0.25
1-3/4, 2", 2-1/2"	RC-5	0.38	0.38	1.69	1.31	0.75	1/2-20	0.94	1.12	0.31
3"	RC-6	0.50	0.50	2.75	2.25	1	5/8-18	1.5	1.41	0.38

Norgren.com/usa – 303.794.2611 – help@amer.norgren.com

Roundline Plus Stainless Steel Body Actuators

Dimensions in inches

Foot Bracket

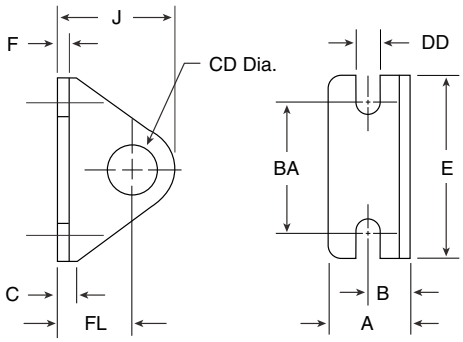

Bore	Part Number	A	B	BA	C	CD	DD	E	F	FL	J
5/16"(S)	FB-0S	0.38	0.25	0.75	0.13	0.25	0.13	1.00	0.06	0.44	0.75
5/16"(D)	FB-0D	0.38	0.25	0.75	0.13	0.38	0.13	1.00	0.06	0.44	0.75
7/16"(S)	FB-1	0.62	0.31	1.00	0.12	0.38	0.19	1.38	0.07	0.56	0.88
7/16"(D), 9/16"(S/D)	FB-2	0.69	0.38	1.00	0.12	0.44	0.19	1.38	0.09	0.56	0.83
3/4"(S)	FB-3	0.75	0.44	1.25	0.19	0.50	0.19	1.62	0.10	0.69	1.09
3/4"(D), 7/8"(S/D), 1-1/16"(S/D)	FB-4	1.00	0.56	1.50	0.25	0.62	0.27	1.88	0.12	0.81	1.38
1-1/4"(S/D), 1-1/2"(S/D)	FB-5	1.50	0.75	1.88	0.62	0.75	0.28	2.50	0.12	1.00	1.75
1-3/4"(S/D)	FB-5A	1.50	0.88	2.25	0.75	1.03	0.34	3.00	0.19	1.25	2.13
2"(S/D)	FB-6	1.62	1.00	2.25	0.62	1.38	0.34	3.12	0.25	1.50	2.50
2-1/2"(D)	FB-7	1.62	1.00	2.88	0.75	1.50	0.34	3.75	0.25	1.75	3.00
3"(D)	FB-8	1.62	1.00	3.50	0.89	1.63	0.34	4.38	0.26	1.89	3.14

S = Single Acting Models D = Double Acting Models S/D = Single and Double Acting Models

Trunnion Bracket

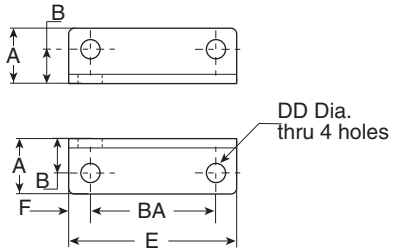

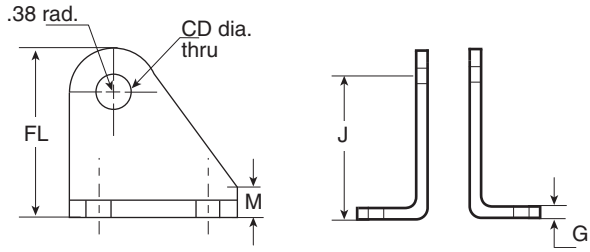

Bore	Part number	A	B	BA	CD	DD	E	F	FL	G	J	M
7/16"	PB-4	1.13	0.69	1.00	0.38	0.27	1.50	0.25	1.75	0.25	1.38	0.38
3/4", 1-1/16", 1-1/2"	TB-1	1.13	0.69	1.00	0.50	0.27	1.50	0.25	1.75	0.25	1.38	0.38

Mounting Nut

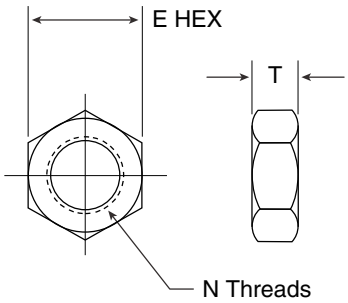

Single Acting Spring Return Models

Bore	Part Number	N	E	T
5/16"	MN-0	1/4-28	0.44	0.16
7/16"	MN-1	3/8-24	0.56	0.22
9/16"	MN-2	7/16-20	0.69	0.25
3/4"	MN-3	1/2-20	0.75	0.31
7/8", 1-1/16"	MN-4	5/8-18	0.94	0.38
1-1/4", 1-1/2"	MN-5	3/4-16	1.12	0.42
1-3/4"	MN-5A	1-14	1.50	0.55
2"	MN-6	1-1/4-12	1.88	0.50

Single Acting Spring Extend & Double Acting Models

Bore	Part Number	N	E	T
5/16"	MN-1	3/8-24	0.56	0.22
7/16", 9/16"	MN-2	7/16-20	0.69	0.25
3/4", 7/8", 1-1/16"	MN-4	5/8-18	0.94	0.38
1-1/4", 1-1/2"	MN-5	3/4-16	1.12	0.42
1-3/4"	MN-5A	1-14	1.50	0.55
2"	MN-6	1-1/4-12	1.88	0.50
2-1/2"	MN-7	1-3/8-12	1.88	0.50
3"	MN-8	1-1/2-12	2.25	0.50

NORGREN
ENGINEERING ADVANTAGE

RPHD Series Magnetic Roundline Plus Stainless Steel Body Cylinders

Double acting

9/16" - 2-1/2" bores

Technical Data

Medium:
Filtered, lubricated or non-lubricated, compressed air

Maximum Operating Pressure:
250 psig (17.2 bar)

Temperature Range*:
Standard nitrile seals:
-20°F to 200°F (-29°C to 93°C)
Viton / High temp seals:
-20°F to 400°F (-29°C to 205°C)
* With dew point of supply air less than air temperature below 36°F (2°C).

Lubrication:
All RPHD cylinders are pre-lubricated during assembly with a Teflon® based grease for non-lube service and long life.

Materials:
Cylinder Body:
304 Stainless Steel
Head and Cap:
Aluminum alloy
Piston Rods:
300 series, chrome plated stainless steel
Rod Bearings:
Oil impregnated sintered bronze
Piston:
Aluminum Alloy or stainless steel
Rod & Piston Seals: Nitrile
Pivot bracket, rod clevis, foot bracket, mounting nut:
Bright zinc plated carbon steel

Options selector

RPHD 106 x 3.250 - DAN - M2

Series	Substitute
RPHD Series Magnetic	RPHD

Bore	Substitute
9/16"	056
3/4"	075
1-1/16"	106
1-1/4"	125
1-1/2"	150
1-3/4"	175
2"	200
2-1/2"	250

Stroke
Increments of 1/16" up to 36"

Options	Substitute
Viton / High Temp seals	HT*
Switch rail and position	M1, M2, M3, M4
Side Ported end cap (DAN mount only)	PC
Alternate port location	PL(__)
Plain rod end	PR**
Rod extension over std. (specify additional length)	RX(_)
Thread extension over std. (specify additional length)	TX(_)
Bumpers both ends	UB*

*Viton seals and Bumpers are available in combination; however, the temperature rating of the cylinder is limited to the maximum temperature rating of the bumpers.
Note: The magnetic field could be compromised with temperatures in excess of 200°F.
** PR Rod end will not have threads, but will maintian the standard "A" dimension.

Mounting Options (All models are double acting)	Substitute
Nose	DAN
Double End (with pivot bushing)	DAD
Double Rod End	DRD

Norgren.com/usa – 303.794.2611 – help@amer.norgren.com

RPHD Series Magnetic Roundline Plus Stainless Steel Body Cylinders

The RPHD Series cylinders provide:

- Roundline Plus cylinder features and construction
- More robust mounting threads
- Larger rod diameters
- Longer rod bearing for long life
- A magnet for position sensing with external reed switches
- Preferred mounting styles for versatility and ease of installation

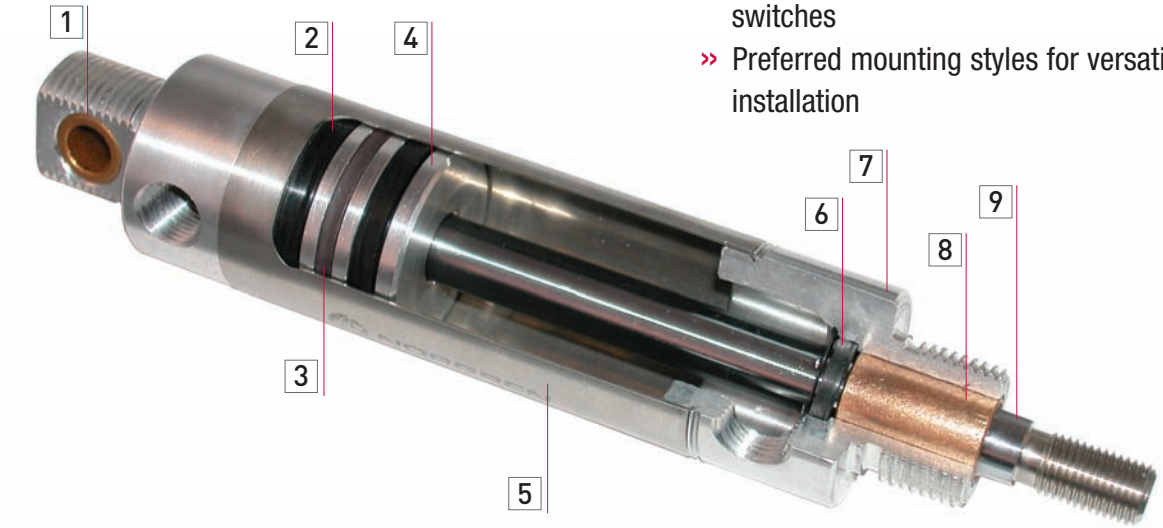

1 **Pivot Bushing** (DAD model): Sintered bronze pivot bushing

2 **Piston Seals:** Lip-Type nitrile piston seals are wear compensating for long life.

3 **Magnetic Band:** On piston for position sensing with external switches.

4 **Piston:** Solid aluminum piston is strong, yet lightweight for low inertia. Stainless steel in double rod models.

5 **Cylinder Tube:** 304 Stainless steel cylinder body ensures smooth performance and outstanding life cycle.

6 **Rod Seal:** Lip-Type nitrile, pressure energized and wear compensating.

7 **Head and Cap:** Solid aluminum alloy for strength and durability.

8 **Bearing:** Oil impregnated, sinterend bonze provides exceptional rod support, and optimal cycle life.

9 **Piston Rod:** Chrome plated 300 series stainless steel for smooth operation and corrosion resistance.

Options

Switch Rail Mounting Position

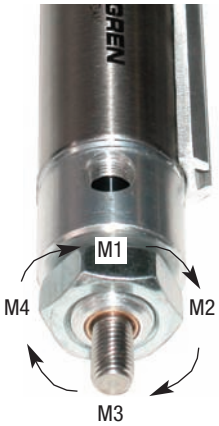

Switch rail can be mounted in 4 positions
M1 = position 1
M2 = position 2
M3 = position 3
M4 = position 4

Switches ordered separately

Option PC - Side Ported End Cap

Cap end port will be on the side of the end cap and in line with the head end port. Overall length of the cylinder will increase with this option. See dimensional tables for overall length information.

Option PL(__)

Alternate Port Location
Designate location on head and cap respectively. For Example: L(12) = Head port location #1, and cap port location #2.

Option UB -

Bumpers both ends
NOTE: Bumpers will increase the overall length of the cylinder. See chart for length adders.

Bore	UB option length adder
9/16"	0.125"
3/4"	0.250"
1-1/16"	0.250"
1-1/4"	0.250"
1-1/2"	0.250"
1-3/4"	0.250"
2"	0.250"
2-1/2"	0.250"

NORGREN ENGINEERING ADVANTAGE

RPHD Series Magnetic Roundline Plus Stainless Steel Body Cylinders

RPHD Double acting nose mount (DAN)

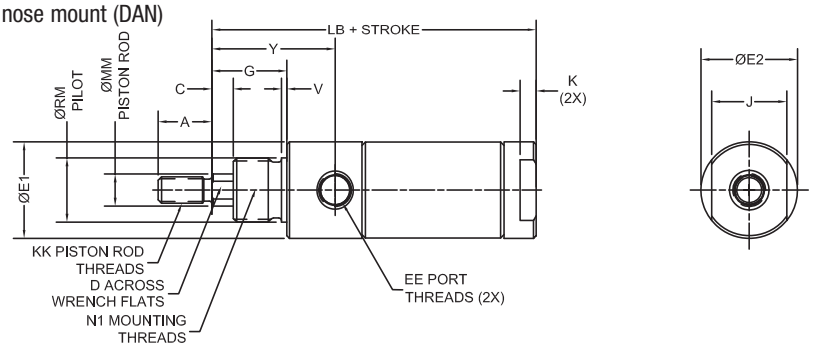

Bore	Code	A	C	D	EE	E1	E2	G	J	K	KK	LB	MM	N1	RM	V	Y
9/16"	(056)	0.50	N/A	N/A	#10-32	0.61	0.61	0.38	0.50	0.19	#10-32	2.53	0.187	7/16-20	.434/.437	0.06	0.75
3/4"	(075)	0.59	0.25	0.25	1/8 NPT	1.13	0.81	0.75	0.63	0.19	1/4-28	3.53	0.312	5/8-18	.621/.624	0.06	1.28
1-1/16"	(106)	0.63	0.25	0.31	1/8 NPT	1.13	1.13	0.88	0.88	0.19	5/16-24	3.78	0.375	3/4-16	.746/.749	0.06	1.44
1-1/4"	(125)	0.75	0.25	0.38	1/8 NPT	1.34	1.34	1.00	0.88	0.25	3/8-24	3.91	0.437	7/8-14	.871/.874	0.08	1.56
1-1/2"	(150)	0.88	0.25	0.44	1/4 NPT	1.56	1.56	1.06	0.88	0.25	7/16-20	4.13	0.500	1-14	.996/.999	0.09	1.66
1-3/4"	(175)	1.00	0.31	0.50	1/4 NPT	1.84	1.84	1.25	1.25	0.25	1/2-20	4.63	0.562	1-1/8-12	1.121/1.124	0.09	1.91
2"	(200)	1.00	0.31	0.50	1/4 NPT	2.08	2.08	1.31	1.25	0.31	1/2-20	5.09	0.625	1-1/4-12	1.246/1.249	0.11	2.03
2-1/2"	(250)	1.25	0.38	0.63	3/8 NPT	2.63	2.63	1.44	1.75	0.31	5/8-18	5.41	0.750	1-3/8-12	1.371/1.374	0.13	2.22

RPHD DAN w/PC side ported end cap option

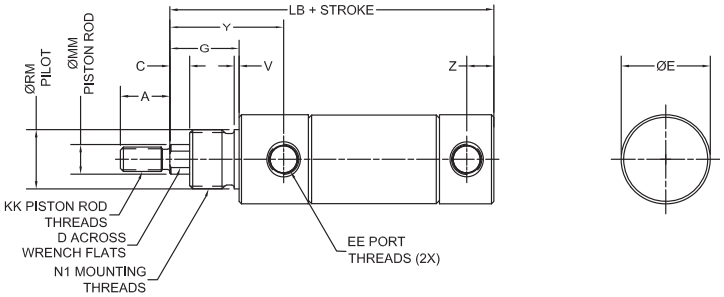

Bore	Code	A	C	D	E	EE	G	KK	LB	MM	N1	RM	V	Y	Z
9/16"	(056)	0.50	N/A	N/A	0.61	#10-32	0.38	#10-32	2.56	0.187	7/16-20	.434/.437	0.06	0.75	0.13
3/4"	(075)	0.59	0.25	0.25	1.13	1/8 NPT	0.75	1/4-28	3.97	0.312	5/8-18	.621/.624	0.06	1.28	0.28
1-1/16"	(106)	0.63	0.25	0.31	1.13	1/8 NPT	0.88	5/16-24	4.09	0.375	3/4-16	.746/.749	0.06	1.44	0.34
1-1/4"	(125)	0.75	0.25	0.38	1.34	1/8 NPT	1.00	3/8-24	4.16	0.437	7/8-14	.871/.874	0.08	1.56	0.34
1-1/2"	(150)	0.88	0.25	0.44	1.56	1/4 NPT	1.06	7/16-20	4.50	0.500	1-14	.996/.999	0.09	1.66	0.41
1-3/4"	(175)	1.00	0.31	0.50	1.84	1/4 NPT	1.25	1/2-20	4.94	0.562	1-1/8-12	1.121/1.124	0.09	1.91	0.41
2"	(200)	1.00	0.31	0.50	2.08	1/4 NPT	1.31	1/2-20	5.47	0.625	1-1/4-12	1.246/1.249	0.11	2.03	0.44
2-1/2"	(250)	1.25	0.38	0.63	2.63	3/8 NPT	1.44	5/8-18	6.09	0.750	1-3/8-12	1.371/1.374	0.13	2.22	0.63

RPHD Double Acting, Double End Mount (DAD)

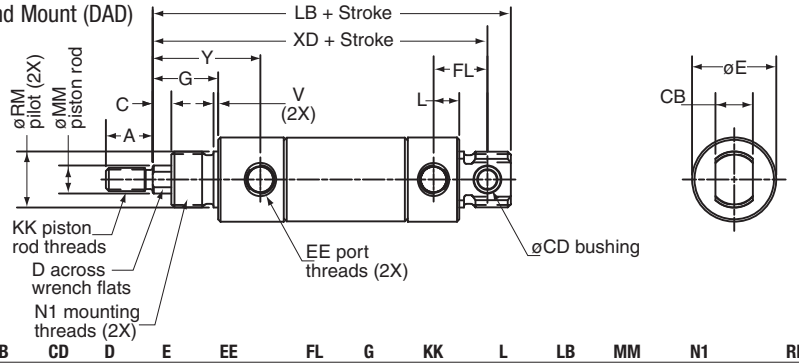

Bore	Code	A	C	CB	CD	D	E	EE	FL	G	KK	L	LB	MM	N1	RM	V	XD	Y
9/16"	(056)	0.50	N/A	0.31	0.16	N/A	0.61	#10-32	0.38	0.38	#10-32	0.25	3.00	0.187	7/16-20	.434/.437	0.06	2.81	0.75
3/4"	(075)	0.59	0.25	0.44	0.22	0.25	1.13	1/8 NPT	0.63	0.75	1/4-28	0.34	4.59	0.312	5/8-18	.621/.624	0.06	4.31	1.28
1-1/16"	(106)	0.63	0.25	0.50	0.25	0.31	1.13	1/8 NPT	0.72	0.88	5/16-24	0.38	4.78	0.375	3/4-16	.746/.749	0.06	4.47	1.44
1-1/4"	(125)	0.75	0.25	0.63	0.31	0.38	1.34	1/8 NPT	0.81	1.00	3/8-24	0.47	5.00	0.437	7/8-14	.871/.874	0.08	4.63	1.56
1-1/2"	(150)	0.88	0.25	0.69	0.38	0.44	1.56	1/4 NPT	0.97	1.06	7/16-20	0.56	5.53	0.500	1-14	.996/.999	0.09	5.06	1.66
1-3/4"	(175)	1.00	0.31	0.75	0.38	0.50	1.84	1/4 NPT	0.97	1.25	1/2-20	0.56	5.97	0.562	1-1/8-12	1.121/1.124	0.09	5.50	1.91
2"	(200)	1.00	0.31	0.86	0.44	0.50	2.08	1/4 NPT	1.09	1.31	1/2-20	0.66	6.63	0.625	1-1/4-12	1.246/1.249	0.11	6.13	2.03
2-1/2"	(250)	1.25	0.38	1.00	0.50	0.63	2.63	3/8 NPT	1.31	1.44	5/8-18	0.69	7.41	0.750	1-3/8-12	1.371/1.374	0.13	6.78	2.22

Norgren.com/usa – 303.794.2611 – help@amer.norgren.com

RPHD Series Magnetic Roundline Plus Stainless Steel Body Cylinders

RPHD Double Acting, Double Rod End (DRD)

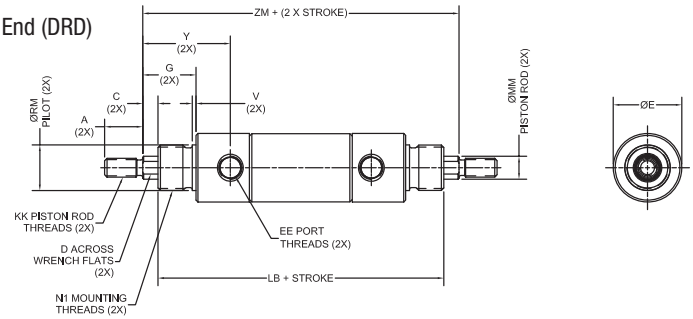

Bore	Code	A	C	D	E	EE	G	KK	LB	MM	N1	RM	V	Y	ZM
9/16"	(056)	0.50	N/A	N/A	0.61	#10-32	0.38	#10-32	3.19	0.187	7/16-20	.434/.437	0.06	0.75	3.19
3/4"	(075)	0.59	0.25	0.25	1.13	1/8 NPT	0.75	1/4-28	4.41	0.312	5/8-18	.621/.624	0.06	1.28	4.91
1-1/16"	(106)	0.63	0.25	0.31	1.13	1/8 NPT	0.88	5/16-24	4.69	0.375	3/4-16	.746/.749	0.06	1.44	5.19
1-1/4"	(125)	0.75	0.25	0.38	1.34	1/8 NPT	1.00	3/8-24	4.88	0.437	7/8-14	.871/.874	0.08	1.56	5.38
1-1/2"	(150)	0.88	0.25	0.44	1.56	1/4 NPT	1.06	7/16-20	5.25	0.500	1-14	.996/.999	0.09	1.66	5.75
1-3/4"	(175)	1.00	0.31	0.50	1.84	1/4 NPT	1.25	1/2-20	5.81	0.562	1-1/8-12	1.121/1.124	0.09	1.91	6.44
2"	(200)	1.00	0.31	0.50	2.08	1/4 NPT	1.31	1/2-20	6.50	0.625	1-1/4-12	1.246/1.249	0.11	2.03	7.13
2-1/2"	(250)	1.25	0.38	0.63	2.63	3/8 NPT	1.44	5/8-18	7.00	0.750	1-3/8-12	1.371/1.374	0.13	2.22	7.75

RPHD Mounting Accessories

RPHD Pivot Bracket

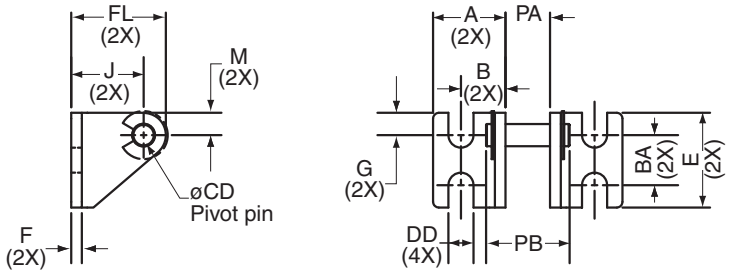

Bore	Code	Part Number	A	B	BA	CD	DD	E	F	FL	G	J	M	PA	PB
9/16"	(056)	PB-1K	0.50	0.28	0.50	0.16	0.20	0.75	0.06	0.77	0.13	0.56	0.20	0.34	0.63
3/4"	(075)	PB-52	0.81	0.50	0.56	0.22	0.28	1.06	0.12	1.03	0.25	0.81	0.22	0.44	0.88
1-1/16"	(106)	PB-53	0.81	0.50	0.56	0.25	0.28	1.06	0.12	1.06	0.25	0.81	0.25	0.50	0.94
1-1/4"	(125)	PB-54	0.88	0.56	0.81	0.31	0.28	1.31	0.16	1.31	0.25	1.00	0.31	0.63	1.19
1-1/2"	(150)	PB-55	1.00	0.63	1.00	0.38	0.28	1.50	0.19	1.50	0.25	1.13	0.38	0.69	1.44
1-3/4"	(175)	PB-56	1.13	0.69	1.00	0.38	0.34	1.63	0.19	1.63	0.31	1.25	0.38	0.75	1.44
2"	(200)	PB-57	1.19	0.75	1.19	0.44	0.34	1.81	0.25	1.81	0.31	1.38	0.44	0.88	1.69
2-1/2"	(250)	PB-58	1.38	0.88	1.38	0.50	0.41	2.13	0.25	2.13	0.38	1.63	0.50	1.00	2.22

RPHD Mounting Nut

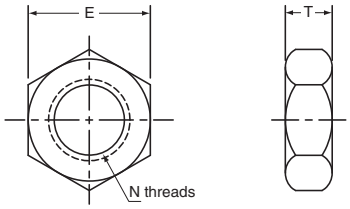

Bore	Code	Part Number	E	N	T
9/16"	(056)	MN-2	0.69	7/16-20	0.25
3/4"	(075)	MN-4	0.94	5/8-18	0.38
1-1/16"	(106)	MN-5	1.13	3/4-16	0.42
1-1/4"	(125)	MN-54	1.31	7/8-14	0.51
1-1/2"	(150)	MN-5A	1.50	1-14	0.55
1-3/4"	(175)	MN-56	1.69	1-1/8-12	0.64
2"	(200)	MN-6	1.88	1-1/4-12	0.50
2-1/2"	(250)	MN-7	2.25	1-3/8-12	0.50

RPHD Rod Clevis

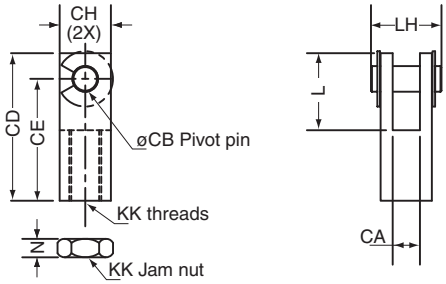

Bore	Code	Part Number	CA	CB	CD	CE	CH	KK	L	LH	N
9/16"	(056)	RC-1	0.19	0.19	0.94	0.75	0.38	#10-32	0.56	0.66	0.13
3/4"	(075)	RC-52	0.22	0.22	1.44	1.19	0.44	1/4-28	0.75	0.63	0.16
1-1/16"	(106)	RC-53	0.25	0.25	1.44	1.19	0.50	5/16-24	0.75	0.69	0.20
1-1/4"	(125)	RC-54	0.31	0.31	1.69	1.38	0.63	3/8-24	0.94	0.88	0.23
1-1/2"	(150)	RC-55	0.38	0.38	2.00	1.63	0.75	7/16-20	1.13	1.03	0.26
1-3/4"	(175)	RC-56	0.38	0.38	2.13	1.75	0.75	1/2-20	1.13	1.03	0.32
2"	(200)	RC-57	0.44	0.44	2.31	1.88	0.88	1/2-20	1.31	1.14	0.32
2-1/2"	(250)	RC-6	0.50	0.50	2.75	2.25	1.00	5/8-18	1.50	1.41	0.39

RPHD Foot Bracket

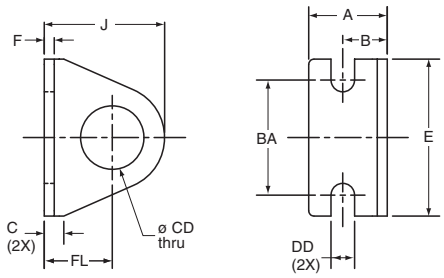

Bore	Code	Part Number	A	B	BA	C	CD	DD	E	F	FL	J
9/16"	(056)	FB-2	0.69	0.38	1.00	0.13	0.44	0.20	1.38	0.09	0.56	0.83
3/4"	(075)	FB-4	1.00	0.56	1.50	0.25	0.63	0.28	1.88	0.12	0.81	1.38
1-1/16"	(106)	FB-53	0.94	0.53	1.38	0.23	0.75	0.28	1.88	0.12	0.81	1.44
1-1/4"	(125)	FB-54	1.16	0.66	1.56	0.31	0.88	0.28	2.13	0.16	1.00	1.75
1-1/2"	(150)	FB-55	1.31	0.75	1.81	0.37	1.00	0.28	2.38	0.19	1.13	2.00
1-3/4"	(175)	FB-56	1.44	0.81	2.13	0.37	1.13	0.34	2.75	0.19	1.25	2.19
2"	(200)	FB-57	1.59	0.91	2.38	0.43	1.25	0.34	3.00	0.22	1.38	2.44
2-1/2"	(250)	FB-58	1.88	1.06	3.00	0.50	1.38	0.41	3.75	0.25	1.63	2.81

NORGREN
ENGINEERING ADVANTAGE

RPD Series Delrin® End Cap

Roundline Plus Stainless Steel Body Actuators

9/16" to 2" bore

Double acting pneumatic actuators

Delrin Acetal Resin end cap cylinders for washdown, and corrosive environment application

Technical data

Medium:
Filtered, lubricated or non-lubricated, compressed air

Maximum Operating Pressure:
125 psig (8.6 bar)

Temperature Range:
Standard Nitrile Seals:
32° to 160°F (0°C to 72°C)

Lubrication:
All RPD cylinders are pre-lubricated during assembly with a Teflon® based grease for non-lube service and long life.

Materials
Cylinder Body:
304 Series stainless steel
Head and Cap:
Delrin Acetal Resin
Piston Rod:
300 Series chrome plated stainless steel
Piston: Anodized aluminum alloy or stainless steel
Rod & Piston Seals: Nitrile
Mounting Accessories: 300 Series stainless steel

Delrin® is a registered trademark of E.I. Du Pont de Nemours and Company for its brand of acetal resin.

Options selector

RPD 106 x 3.250 - DAN - PS

Series

RPD Series Delrin end cap	RPD
RPD Series Delrin with Ecology Seals*	*ERPD

* Ecology version not available on 9/16" bore RPD cylinder

Bore Size

9/16"	056
3/4"	075
1-1/16"	106
1-1/2"	150
2"	200

Stroke

Increments of 1/16" up to 36"

Additional Options

Alternate female thread (Specify thread type)	FT (_)
Viton seals	HT**
Switch rail and position	M1, M2, M3, M4
Side ported end cap (DAN mount only)	PC
Alternate port location	PL(_)
Plain rod end	PR
Magnetic piston	PS
Rod extension over std. (specify additional length)	RX(_)
Rod wiper	RW†
Alternate male thread (Specify thread type)	TM (_)
Thread extension over std. (specify additional length)	TX(_)
Bumper both ends	UB

Mounting Options (all models are double acting)

Nose	DAN
Double End (with pivot hole)	DAD
Double Rod End	DRD

** Viton seals are for chemical compatibility applications, and are not available in Ecology 1-1/16" bore

† Rod wiper not available on 9/16" bores

Norgren.com/usa – 303.794.2611 – help@amer.norgren.com

RPD Series Delrin® End Cap

RPD Series Delrin® End Cap
Roundline Plus Stainless Steel Body Actuators

The Norgren RPD Series Cylinder utilizes a stainless steel body, a stainless steel rod, and Delrin® (acetal resin) end caps for corrosion resistance. This cylinder is designed to endure a variety of environmental conditions. The RPD Series construction provides resistance to moisture, various solvents, and many other neutral chemicals. The Norgren RPD Series is ideal in corrosive environment applications.

Additionally, the Norgren RPD Series Cylinder is the only Delrin® end cap cylinder in the industry to offer the patented impact dampening Ecology Seal Technology. The Ecology Seal option, used in conjuction with a fixed cushion, eliminates the bacteria-collecting cushion screw orifice found in competing adjustable cushion model cylinders.

1. Head and Cap: Delrin® (acetal resin)
2. Piston Rod: Chrome plated stainless steel
3. Tube: Stainless steel
4. Piston: Anodized aluminum (stainless steel on 9/16" bore DRD model)
5. Piston Seals: Nitrile (Viton® optional)
6. Optional magnet on piston for position sensing

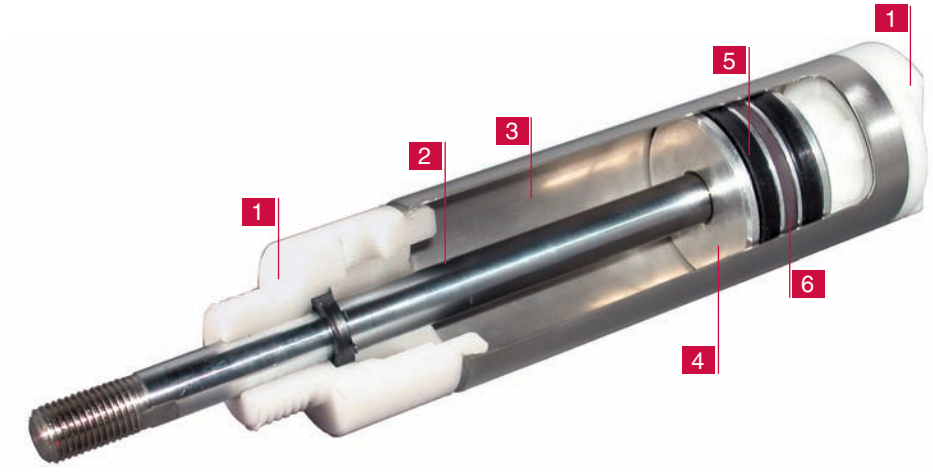

Delrin® is a registered trademark of E.I. Du Pont de Nemours and Company for its brand of acetal resin.
For detailed technical specifications on the properties of Delrin®, please contact DuPont (www.dupont.com).

NORGREN ENGINEERING ADVANTAGE

RPD Series Delrin® End Cap

Double Acting Nose Mount (DAN)

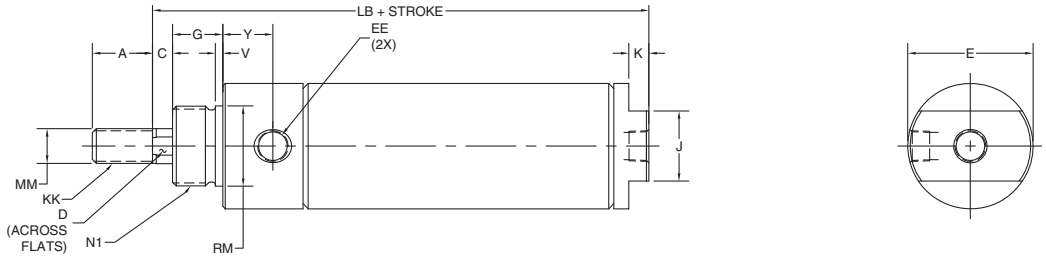

Bore		A	C	D	E	EE	G	J	K	KK	LB	LB Ecology or PC	LB Bumpers	MM	N1	RM	V	Y
9/16"	(056)	0.50	--	--	0.61	#10-32	0.38	0.50	0.19	#10-32	2.28	--	2.41	0.19	7/16-20	.434/.437	0.06	0.38
3/4"	(075)	0.50	--	--	0.81	1/8 NPT	0.50	0.63	0.19	1/4-28	2.97	3.41	2.97	0.25	5/8-18	.621/.624	0.09	0.47
1-1/16"	(106)	0.50	0.13	0.25	1.13	1/8 NPT	0.50	0.88	0.19	5/16-24	3.25	3.50	3.38	0.31	5/8-18	.621/.624	0.09	0.56
1-1/2"	(150)	0.75	0.25	0.38	1.56	1/8 NPT	0.63	0.88	0.25	7/16-20	3.69	3.88	3.82	0.44	1-14	.996/.999	0.09	0.63
2"	(200)	0.88	0.38	0.50	2.08	1/4 NPT	0.81	1.25	0.31	1/2-20	4.69	5.06	4.94	0.63	1-1/4-12	1.371/1.374	0.13	0.73

PS (Magnetic Piston) length adder: 1-1/16" & 1-1/2" bores = 0.125". 9/16", 3/4", and 2" bores = 0.25".
When PS (magnetic piston) and Ecology options are ordered in combination, use "LB Ecology" length only - do not add extra length for the magnet.

Double Acting Pivot Mount (DAD)

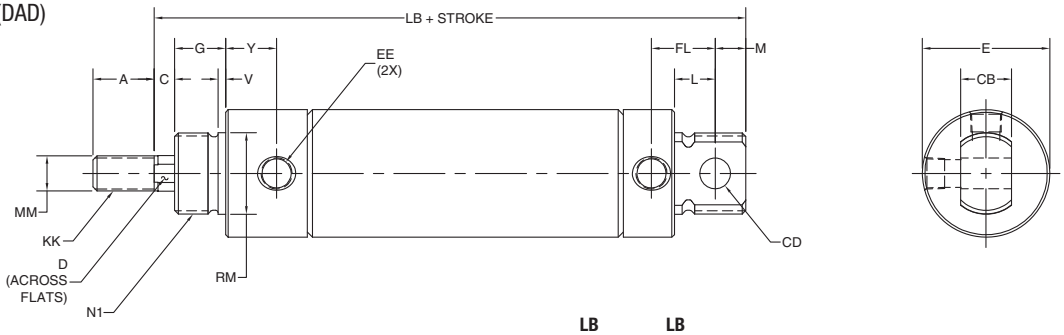

Bore		A	C	CB	CD	D	E	EE	FL	G	KK	L	LB	LB Ecology	LB Bumpers	M	MM	N1	RM	V	Y
9/16"	(056)	0.50	--	0.31	0.16	--	0.61	#10-32	0.38	0.38	#10-32	0.25	2.56	–	2.69	0.19	0.19	7/16-20	.434/.437	0.06	0.38
3/4"	(075)	0.50	--	0.38	0.25	--	0.81	1/8 NPT	0.63	0.50	1/4-28	0.34	3.75	3.75	3.75	0.28	0.25	5/8-18	.621/.624	0.09	0.47
1-1/16"	(106)	0.50	0.13	0.38	0.25	0.25	1.13	1/8 NPT	0.63	0.50	5/16-24	0.34	3.84	3.84	3.97	0.28	0.31	5/8-18	.621/.624	0.09	0.56
1-1/2"	(150)	0.75	0.25	0.63	0.38	0.38	1.56	1/8 NPT	0.78	0.63	7/16-20	0.50	4.38	4.38	4.50	0.38	0.44	1-14	.996/.999	0.09	0.63
2"	(200)	0.88	0.38	0.74	0.38	0.50	2.08	1/4 NPT	1.03	0.81	1/2-20	0.56	5.63	5.63	5.88	0.44	0.63	1-1/4-12	1.371/1.374	0.13	0.73

PS (Magnetic Piston) length adder: 1-1/16" & 1-1/2" bores = 0.125". 9/16", 3/4", and 2" bores = 0.25".
When PS (magnetic piston) and Ecology options are ordered in combination, use "LB Ecology" length only - do not add extra length for the magnet.

Double Acting Double Rod End Mount (DRD)

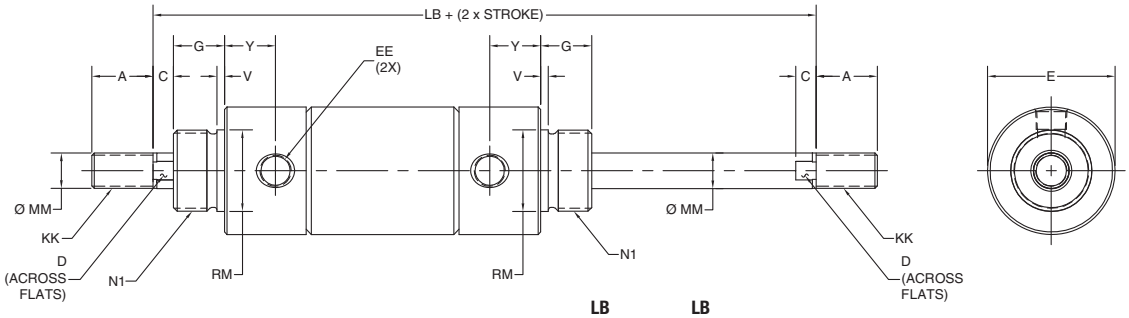

Bore		A	C	D	E	EE	G	KK	LB	LB Ecology	LB Bumpers	MM	N1	RM	V	Y
9/16"	(056)	0.50	--	--	0.61	#10-32	0.38	#10-32	2.94	–	3.06	0.19	7/16-20	.434/.437	0.06	0.38
3/4"	(075)	0.50	--	--	0.86	1/8 NPT	0.50	1/4-28	4.00	4.00	4.00	0.25	5/8-18	.621/.624	0.09	0.47
1-1/16"	(106)	0.50	0.13	0.25	1.13	1/8 NPT	0.50	5/16-24	4.00	4.00	4.50	0.31	5/8-18	.621/.624	0.09	0.56
1-1/2"	(150)	0.75	0.25	0.38	1.56	1/8 NPT	0.63	7/16-20	5.13	5.13	5.25	0.44	1-14	.996/.999	0.09	0.63
2"	(200)	0.88	0.38	0.50	2.08	1/4 NPT	0.81	1/2-20	6.56	6.56	6.81	0.63	1-1/4-12	1.371/1.374	0.13	0.73

PS (Magnetic Piston) length adder = 0.25" for all bore sizes.
When PS (magnetic piston) and Ecology options are ordered in combination, use "LB Ecology" length only - do not add extra length for the magnet.

Norgren.com/usa – 303.794.2611 – help@amer.norgren.com

RPD Series Delrin® End Cap

Dimensions in inches

Stainless steel Rod Clevis (includes nut and pin)

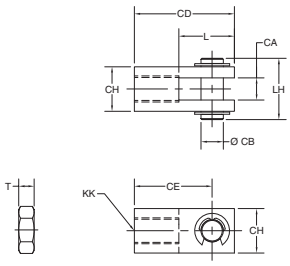

Bore		P/N	CA	CB	CD	CE	CH	L	LH	KK	T
9/16"	(056)	DRC-056	0.19	0.19	0.94	0.75	0.38	0.56	0.56	#10-32	0.13
3/4"	(075)	DRC-075	0.25	0.25	1.19	0.94	0.50	0.69	0.69	1/4-28	0.16
1-1/16"	(106)	DRC-106	0.25	0.25	1.19	0.94	0.50	0.69	0.69	5/16-24	0.19
1-1/2"	(150)	DRC-150	0.38	0.38	1.69	1.31	0.75	0.94	1.03	7/16-20	0.25
2"	(200)	DRC-200	0.38	0.38	1.69	1.31	0.75	0.94	1.03	1/2-20	0.31

Stainless steel Pivot Bracket (includes pin)

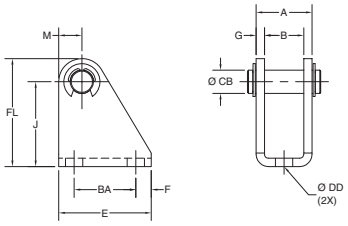

Bore		P/N	A	B	BA	CB	DD	E	F	FL	G	J	M
9/16"	(056)	DPB-056	0.44	0.31	0.50	0.16	0.20	0.75	0.13	0.76	0.06	0.56	0.20
3/4"	(075)	DPB-075	0.63	0.38	0.75	0.25	0.22	1.13	0.19	1.19	0.12	0.88	0.31
1-1/16"	(106)	DPB-075	0.63	0.38	0.75	0.25	0.22	1.13	0.19	1.19	0.12	0.88	0.31
1-1/2"	(150)	DPB-150	0.91	0.63	1.00	0.38	0.28	1.50	0.25	1.75	0.13	1.38	0.38
2"	(200)	DPB-200	1.25	0.75	1.00	0.38	0.28	1.50	0.25	1.75	0.25	1.38	0.38

Stainless steel Foot Bracket

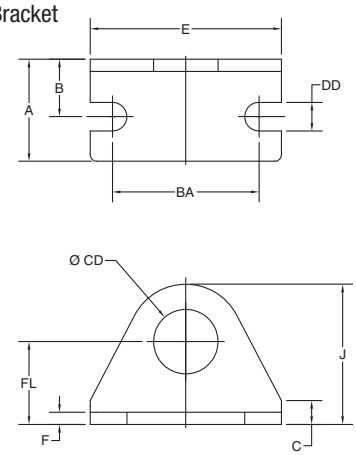

Bore		P/N	A	B	BA	C	CD	DD	E	F	FL	J
9/16"	056	RPDFB-056	0.69	0.38	0.97	0.13	0.44	0.19	1.38	0.09	0.56	0.84
3/4"	075	RPDFB-075	1.00	0.56	1.44	0.23	0.63	0.27	1.88	0.12	0.81	1.38
1-1/16"	106	RPDFB-075	1.00	0.56	1.44	0.23	0.63	0.27	1.88	0.12	0.81	1.38
1-1/2"	150	RPDFB-150	1.50	0.75	1.88	0.72	1.00	0.28	2.50	0.12	1.00	1.75
2"	200	RPDFB-200	1.63	1.00	2.25	0.61	1.38	0.34	3.13	0.25	1.50	2.50

Stainless steel Mounting Nut

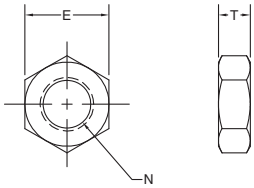

Bore		P/N	E	N	T	Maximum torque (in-lbs.)
9/16"	(056)	52025-SS	0.69	7/16-20	0.25	4
3/4"	(075)	52027-SS	0.94	5/8-18	0.38	12
1-1/16"	(106)	52027-SS	0.94	5/8-18	0.38	12
1-1/2"	(150)	52030-SS	1.50	1-14	0.55	30
2"	(200)	52085-SS	1.88	1-1/4-12	0.50	45

NORGREN
ENGINEERING ADVANTAGE

RT Series Roundline Plus Thrusters

9/16" to 3" bore

Composite and Roller Bearings

PS magnetic piston option

Optional ecology seal

Optional shock absorbers

Choice of high load composite or precision low friction bearings

Comes with stroke adjusting collars

Technical data

Medium:

Filtered, lubricated or non-lubricated, compressed air

Operating Pressure

250 psig (17.2 Bar) Max.

Temperature Range:

Standard Nitrile seals:

-20°F to 200°F (-29°C to 93°C)

*With dew point of supply air less than air temperature below 35°F (2°C)

Lubrication:

All Roundline Thruster cylinders are prelubricated at the time of assembly with a Teflon®-Based grease, for non-lube service and long life.

Thruster Materials:

Guide shafts with **composite bearings**:

9/16" to 2.0" bore: Chrome plated 303 SS.

2-1/2" to 3.0": Chrome plated carbon steel.

Guide shafts with **roller bearings**:

All bore sizes case hardened carbon steel shafts.

Body: Anodized aluminum housing and tooling plate. Choice of composite or roller bearing shaft guides.

Cylinder Materials:

304 Stainless Steel body

Aluminum alloy head,cap and piston

Oil impregnated sintered bronze rod bearing

Chrome Plated stainless steel piston rod.

Nitrile piston and rod seals

Options selector

RT 075 C x 4.50 CC

Series

Roundline Thruster	RT
Roundline Cylinder with *Ecology Seals	ERT*

Bore Size

9/16"		056
3/4"	E	075
1-1/16"	E	106
1-1/2"	E	150
2"	E	200
2-1/2"	E	250
3"	E	300

E*- Ecology seals available,
Note: Ecology seals not available in 9/16" bore.

Bearing Type

Composite	C
Roller	R

Maximum Stroke Lengths **

056	6.0" Maximum Stroke
075	12.0" Maximum Stroke
106	12.0" Maximum Stroke
150	12.0" Maximum Stroke
200	12.0" Maximum Stroke
250	12.0" Maximum Stroke
300	12.0" Maximum Stroke

* ERT, Ecology Thruster come complete with non-adjustable cushions both ends (NH, NC, NB, options not required in model number of ERT Thruster). Note cushions and ecology seals not available in 9/16" bore.

**Consult factory for longer stroke lengths.

Options

Stroke Adjustment (Collar & Bumper) Extend	AE
Stroke Adjustment (Collar & Bumper) Both Ends	AJ
Stroke Adjustment (Collar & Bumper) Retract	AR
Adjustable Cushion Both Ends	CB
Adjustable Cushion Cap End (Retract)	CC
Adjustable Cushion Head End (Extend)	CH
Dowel Pin*	DP
Switch Rail	M1
Mounting Plate (Composite only)**	MP
No Mounting Plate (Roller only)**	NM
Non-Adjustable cushions both ends†	NB
Non-Adjustable cushion cap end (Retract)†	NC
Non-Adjustable cushion head end (Extend)†	NH
Side Ported	PC
Magnetic Piston	PS
Shock Absorber Extend ††	SG (‡)
Shock Absorber Retract ††	SH (‡)
Shock Absorber Both ††	SJ (‡)
Tapped Mounting Holes (Composite only)**	TH
Stainless Steel Tooling Plate	TP
Internal Bumpers	UB

*Contact factory for dowel pin option.

** Mounting plate and tapped holes, standard with roller bearing thruster

† ERT Ecology Thrusters come complete with non-adjustable cushions both ends. (NH,NC,NB option not required in model number or ERT Thruster). Note cushions and ecology seals not available in 9/16" bore.

†† Contact application engineering for applications requiring shock absorbers. Shocks available in three different duty rating: Note, shock absorbers not available in 2 1/2" or 3" bore

‡ L=Light, M=Medium, H=Heavy

Norgren.com/usa – 303.794.2611 – help@amer.norgren.com

RT Series Roundline Plus Thrusters

Features

- PS Magnetic piston option for position sensing with either Reed or Hall Effect switches.
- Optional ecology seal with non-adjustable cushion for the optimum in smooth, noise dampening deceleration of load at end of stroke.
- Shock absorbers optional to decelerate heavier loads or high speed applications
- Choice of high load composite or precision low friction bearings.
- A set of stroke adjusting collars come standard on the extend stroke of the roller bearing thruster.

Roller bearings Composite bearings

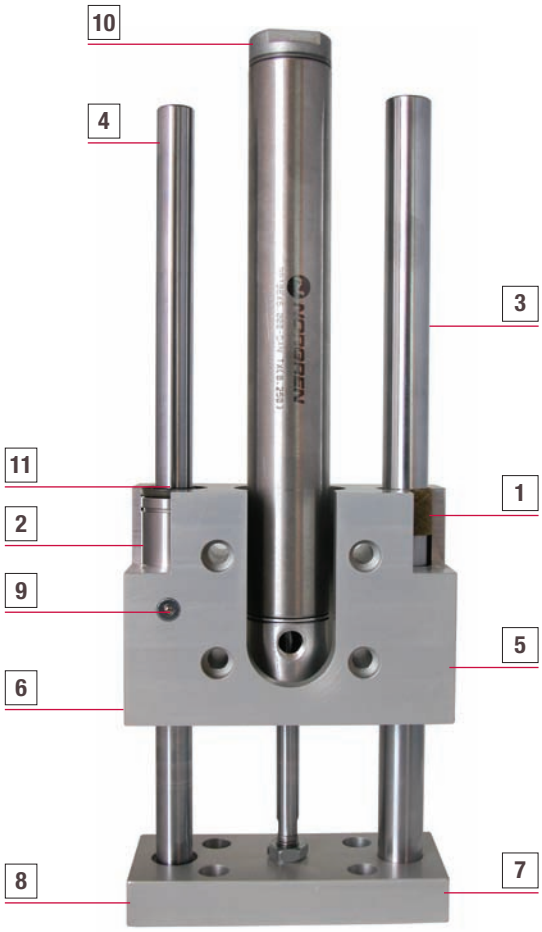

This product is for demonstration purposes only.

1. Two bearings options:
   High load carrying composite bearings...
2. ...or high precision low friction recirculating ball bearings (roller bearings)
3. Composite bearing:
   9/16" to 2.0" bore has stainless steel guide shafts
   2-1/2" and 3.0" bore has chrome plated carbon steel guide shafts
4. Roller bearing: Case hardened steel guide shafts
5. Composite bearings, precision machined clear hard anodized aluminum body and tooling plate
6. Roller bearing, precision machined black anodized aluminum body
7. Composite bearings, clear hard anodized aluminum tooling plate
8. Roller bearings, black oxide steel tooling plate
9. Easily accessible oiler port on roller bearing model
10. RP Series Actuator with stainless steel tube aluminum end caps and chrome plated stainless steel piston rod.
11. Guide shaft wiper included on roller bearing model

Force Factor Data

		Force Factor (Area)	
Bore	Code	Extend	Retract
9/16"	056	0.25	0.2
3/4"	075	0.44	0.36
1-1/16"	106	0.89	0.69
1-1/2"	150	1.77	1.46
2.0"	200	3.14	2.70
2-1/2"	250	4.91	4.47
3.0"	300	7.07	6.47

Force Output Formula
Cylinder Output Force=
Force Factor(area) x Air Line Pressure
Example: 1 1/16" Bore operating at 80psi
Extend Force = .89 x 80 = 71.2lbs
Retract Force = .69 x 80= 55.2 lbs

Replacement Cylinder for (RT) Roundline Thruster

Bore	Model Number
9/16"	RP056X***-DAN-TX(0.063) - options*
3/4"	RP075X***-DAN-SS-TX(0.125) - options*
1-1/16"	RP106X***-DAN-SS-TX(0.250) - options* -NF
1-1/2"	RP150X***-DAN-SS-TX(0.250) - options*
2"	RP200X***-DAN-SS-TX(0.250) - options*
2-1/2"	RP250X***-DAN-SS-TX(0.250) - options*
3"	RP300X***-DAN-SS-TX(0.250) - options*

*** = Stroke in inches
* The following options, if in the model number of the thruster, must be added to the model number of the replacement cylinder part number above.:
PS, M1, CH, CC, CB, NB, NC, NH, PC, UB
Note: If CC, CH or CB, must also add the following option:
CC ------- N(03) CH ------- N(30) CB ------- N(33)

Replacement Cylinder for (ERT) Ecology Roundline Thruster

Bore	Model Number
9/16"	N/A
3/4"	ERP075X***-DAN-SS-TX(0.125) - options*
1-1/16"	ERP106X***-DAN-SS-TX(0.250) - options* -NF
1-1/2"	ERP150X***-DAN-SS-TX(0.250) - options*
2"	ERP200X***-DAN-SS-TX(0.250) - options*
2-1/2"	ERP250X***-DAN-SS-TX(0.250) - options*
3"	ERP300X***-DAN-SS-TX(0.250) - options*

NORGREN
ENGINEERING ADVANTAGE

RT Series Roundline Plus Thrusters

All Dimensions in Inches

Composite Bearing

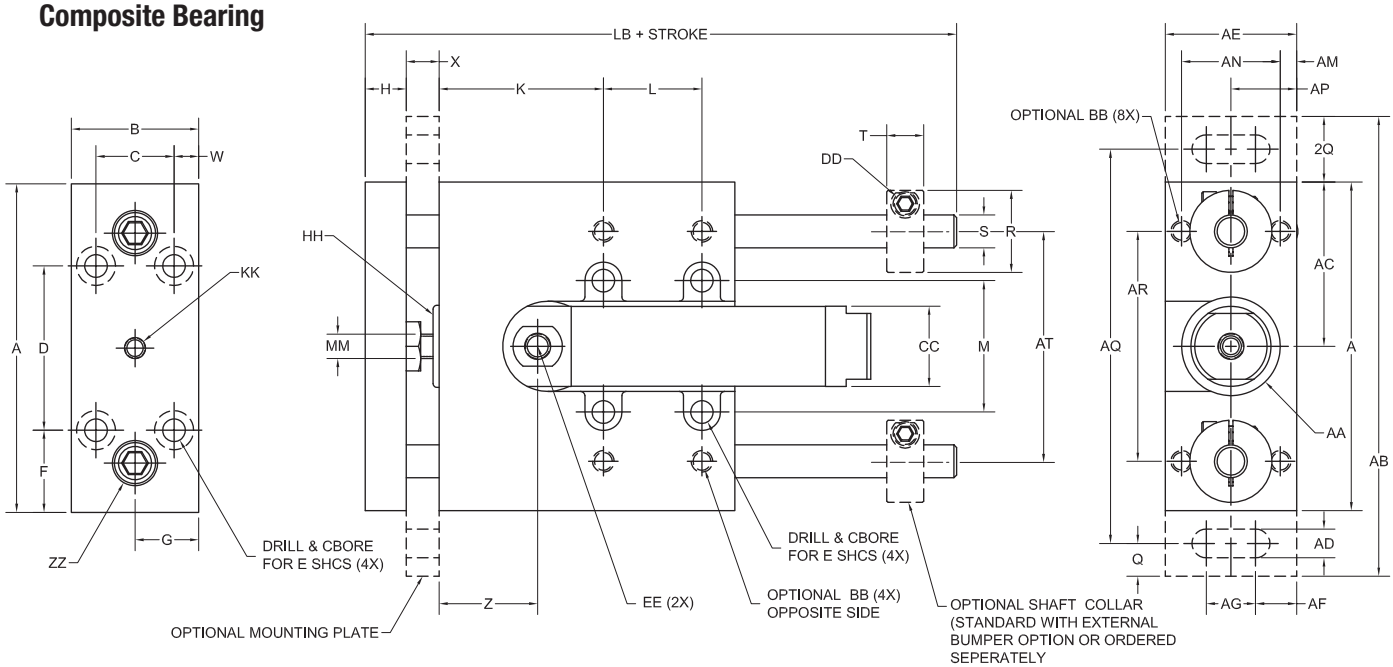

Bore	A	B	BB	C	CC	D	DD	E	EE	F	G	H	HH	K	KK	L	LB	M	MM	Q
9/16"	2.50	0.90	#8-32	0.60	0.62	1.25	#6-32	#8	#10-32	0.63	0.45	0.38	7/16-20	1.25	10-32	0.75	3.50	1.00	0.19	0.25
3/4"	3.00	1.15	#10-32	0.75	0.81	1.50	#8-32	#10	1/8 NPT	0.75	0.58	0.50	5/8-18	0.78	1/4-28	0.94	4.25	1.25	0.25	0.38
1-1/16"	4.25	1.75	1/4-20	1.00	1.12	2.00	#10-32	1/4"	1/8 NPT	1.12	0.88	0.62	5/8-18	0.81	5/16-24	1.38	5.00	1.88	0.31	0.50
1-1/2"	5.50	2.25	5/16-18	1.50	1.56	3.00	1/4-28	5/16"	1/8 NPT	1.25	1.12	0.75	3/4-16	1.12	7/16-20	1.75	6.38	2.38	0.44	0.50
2"	6.00	2.75	5/16-18	2.00	2.08	3.00	1/4-28	5/16"	1/4 NPT	1.50	1.38	1.00	1-1/4-12	1.00	1/2-20	2.00	7.12	2.70	0.62	0.50
2-1/2"	7.50	3.25	3/8-16	2.25	2.62	3.75	1/4-28	3/8"	1/4 NPT	1.88	1.63	1.25	1-3/8-12	1.75	1/2-20	2.50	9.75	3.50	0.62	1.00
3"	9.00	4.00	1/2-13	2.75	3.12	4.50	1/4-28	1/2"	3/8 NPT	2.25	2.00	1.50	1-1/2-12	2.00	5/8-18	3.00	11.50	4.20	0.75	1.00

Bore	R	S	T	W	X	Z	AA	AB	AC	AD	AE	AF	AG	AM	AN	AP	AQ	AR	AT	ZZ
9/16"	0.88	0.38	0.34	0.15	0.25	0.86	0.75	3.50	1.25	0.22	1.00	0.31	0.38	0.12	0.75	0.50	3.00	1.75	1.75	#10-32
3/4"	1.12	0.50	0.41	0.20	0.38	0.85	1.00	4.50	1.50	0.25	1.25	0.38	0.50	0.16	0.94	0.62	3.75	2.12	2.12	1/4-20
1-1/16"	1.31	0.62	0.44	0.38	0.38	1.00	1.50	6.25	2.12	0.38	2.00	0.50	1.00	0.31	1.38	1.00	5.25	3.12	3.12	5/16-18
1-1/2"	1.50	0.75	0.50	0.38	0.50	1.38	2.00	7.50	2.75	0.44	2.50	0.59	1.31	0.38	1.75	1.25	6.50	4.00	4.00	3/8-16
2"	1.62	0.88	0.50	0.38	0.75	1.60	2.25	8.00	3.00	0.44	3.00	0.75	1.50	0.50	2.00	1.50	7.00	4.25	4.25	3/8-16
2-1/2"	1.87	1.13	0.50	0.50	0.75	1.45	3.00	11.50	3.75	0.69	3.50	0.84	1.81	0.50	2.50	1.75	9.50	5.37	5.37	1/2-13
3"	2.25	1.38	0.56	0.63	1.00	1.62	3.50	13.00	4.50	0.81	4.50	1.15	2.19	0.75	3.00	2.25	11.00	6.50	6.50	3/4-16

Approximate Thruster Weights

Bore	Composite Bearing	Roller Bearing	Composite Bearing Per Inch Adder	Roller Bearing Per Inch Adder	Mounting Plate Adder
9/16"	.70 lbs	.83 lbs	.08 lbs	.05 lbs	.06 lbs
3/4"	1.33 lbs	1.59 lbs	.15 lbs	.10 lbs	.14 lbs
1-1/16"	3.18 lbs	4.03 lbs	30 lbs	.16 lbs	.32 lbs
1-1/2"	6.55 lbs	8.54 lbs	.35 lbs	.25 lbs	.60 lbs
2"	9.81 lbs	18.07 lbs	.50 lbs	.40 lbs	1.15 lbs
2-1/2"	19.34 lbs	35.82 lbs	.75 lbs	.62 lbs	2.0 lbs
3"	35.19 lbs	68.71 lbs	1.9 lbs	.96 lbs	3.9 lbs

Guide Shaft Extension With Bumper

Bore Size	Length Adder
9/16"	0.50"
3/4"	0.50"
1-1/16"	0.63"
1-1/2"	0.75"
2"	0.88"
2-1/2"	1.38"
3"	1.50"

Retraction Stroke Reduction with Bumper

Bore Size	Standard	w/Mounting Plate Option
9/16"	0.34"	0.59"
3/4"	0.28"	0.66"
1-1/16"	0.31"	0.69"
1-1/2"	0.25"	0.75"
2"	0"	0.75"
2-1/2"	0.25"	1.00"
3"	0.31"	1.31"

Guide shafts are extended so the extend stroke is not affected with the addition of bumpers and collars, however the retract stroke is shortened. See above chart.

RT Series Roundline Plus Thrusters

All Dimensions in Inches (mm)

Roller Bearing

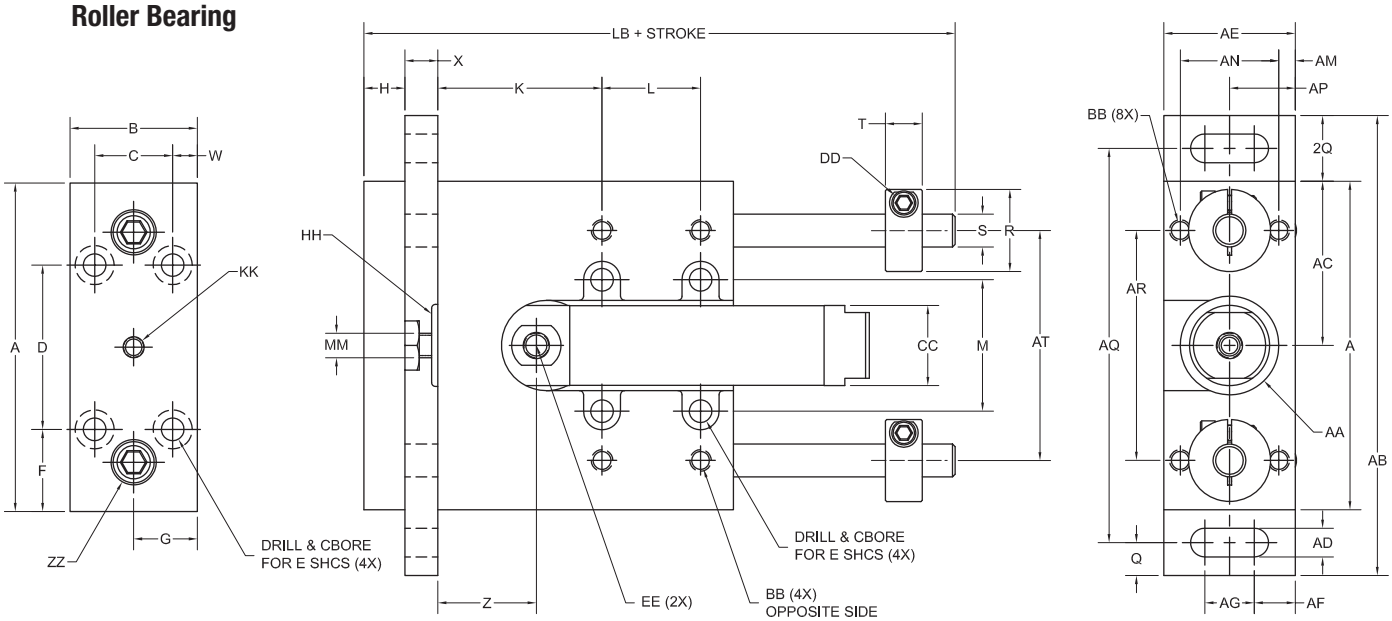

Bore	A	B	BB	C	CC	D	DD	E	EE	F	G	H	HH	K	KK	L	LB	M	MM	Q
9/16"	2.50	1.00	#8-32	0.60	0.62	1.25	4-40	#8	#10-32	0.62	0.50	0.31	7/16-20	1.25	10-32	0.75	3.50	1.00	0.19	0.25
3/4"	3.00	1.25	#10-32	0.75	0.81	1.50	6-32	#10	1/8 NPT	0.75	0.62	0.38	5/8-18	0.78	1/4-28	0.94	4.12	1.25	0.25	0.38
1-1/16"	4.25	2.00	1/4-20	1.00	1.12	2.00	8-32	1/4	1/8 NPT	1.12	1.00	0.50	5/8-18	0.81	5/16-24	1.38	4.75	1.88	0.31	0.50
1-1/2"	5.50	2.50	5/16-18	1.50	1.56	3.00	10-32	5/16	1/8 NPT	1.25	1.25	0.75	3/4-16	1.12	7/16-20	1.75	6.38	2.38	0.44	0.50
2"	7.00	3.00	3/8-16	2.00	2.08	4.00	1/4-28	3/8	1/4 NPT	1.50	1.50	1.00	1 1/4-12	0.94	1/2-20	2.12	7.00	3.25	0.62	0.63
2-1/2"	8.50	4.00	3/8-16	3.00	2.62	4.75	1/4-28	3/8	1/4 NPT	1.76	2.00	1.25	1 3/8-12	1.69	1/2-20	2.63	9.50	4.10	0.62	1.00
3"	11.00	4.00	1/2-13	3.00	3.12	6.00	1/4-28	1/2	3/8 NPT	2.50	2.00	1.50	1 1/2-12	1.50	5/8-18	4.00	11.50	5.25	0.75	1.00

Bore	R	S	T	W	X	Z	AA	AB	AC	AD	AE	AF	AG	AM	AN	AP	AQ	AR	AT	ZZ
9/16"	0.62	0.25	0.28	0.20	0.25	0.86	0.75	3.50	1.25	0.22	1.00	0.31	0.38	0.12	0.75	0.50	3.00	1.75	1.75	N/A
3/4"	0.88	0.38	0.34	0.25	0.38	0.85	0.94	4.50	1.50	0.25	1.25	0.38	0.50	0.16	0.94	0.62	3.75	2.12	2.12	10-32
1-1/16"	1.12	0.50	0.41	0.50	0.38	1.00	1.62	6.25	2.12	0.38	2.00	0.50	1.00	0.31	1.38	1.00	5.25	3.12	3.12	1-4-20
1-1/2"	1.31	0.62	0.44	0.50	0.50	1.50	2.12	7.50	2.75	0.44	2.50	0.59	1.31	0.38	1.75	1.25	6.50	4.00	4.00	3/8-16
2"	1.50	0.75	0.50	0.50	0.75	1.60	3.00	9.50	3.50	0.56	4.00	1.22	1.56	0.94	2.12	2.00	8.25	5.00	5.00	3/8-16
2-1/2"	1.75	1.00	0.50	0.50	0.75	1.48	3.50	12.50	4.25	0.63	4.50	1.25	2.00	0.94	2.63	2.25	10.50	6.25	6.25	1/2-13
3"	2.06	1.25	0.50	0.50	1.00	1.88	4.63	15.00	5.50	0.81	6.00	1.41	3.19	1.00	4.00	3.00	13.00	8.00	8.00	3/4-16

NORGREN
ENGINEERING ADVANTAGE

F-Series Plus Cylinders

Single and Double acting

9/16" to 4" bore

Technical Data:

Medium:

Filtered, lubricated or non-lubricated, compressed air

Operating Pressure

200 psig (13.6 Bar) Max.

Temperature Range:

Standard Nitrile seals:

-40°F to 200°F (-40°C to 93°C)

150°F max. with Bumper Option

High Temp seals:

-20°F to 400°F (-29°C to 205°C)

*With dew point of supply air less than air temperature below 35°F (2°C).

Lubrication:

All F-Series Plus cylinders are prelubricated at the time of assembly with a Teflon® based grease, for non-lube service and long life.

Side Loading:

Cylinders are specifically designed to push and pull. Side loading and misalignment of the piston rod should be avoided to ensure maximum operating performance and life.

Materials:

Cylinder Body:

304 Stainless Steel

Head and Cap:

Clear Anodized Aluminum Alloy

Piston Rod:

303 Stainless Steel

Rod Bearing:

Oil Impregnated Bronze

Piston:

Aluminum Alloy

Rod & Piston seals:

Buna-N

Options selector

FP 106 x 2.375 - PTM - PS

Series	Substitute
Single Rod end	FP
Double Rod end	FPD
Spring Extend	FPC
Spring Retract	FPR

Bore	Substitute
9/16"	056
3/4"	075
1-1/16"	106
1-1/2"	150
2"	200
2-1/2"	250
3"	300
4"	400

Stroke
Increments of 1/8"

Mounting Options	Substitute
*Screw Clearance Holes Front	SCF
*Screw Clearance Holes Rear	SCR
*Screw Clearance Holes Both ends	SCB
Basic Model (std. c'bored mtg. holes)	BAM
**Front Trunnion	TMF
**Rear Trunnion	TMR
**Trunnion both ends	TMB
Pivot Mount	PTM
Threaded mounting holes Front	THF
Threaded mounting holes Rear	THC
Threaded mounting holes Both ends	THB
***Nose Mount	NMT

* Screw clearance to allow bolt head to pass through - no counter bores

** Not available on 9/16" bore

*** Available in FP, FPC, and FPR. Includes a heavy duty end cap and rod wiper.

Options	Substitute
Bumper both ends (not avail. with HT)[1]	UB
Bumper Head (not avail. with HT)[1]	UH
Bumper Cap (not avail. with HT)[1]	UC
Non-Standard Female Thread*	FT(__)
Heavy Duty Rear End Cap[2]	HD
Alternate Port Location	PL(__)
Low Friction Seals[2]	LF
Magnetic Piston[2]	PS
Switch Rail and Position (switches ordered separately)	M1,M2, M3,M4
No Rod Thread	PR
Non-Standard Male Thread	TM(__)
Thread Extension over standard (specify additional length)[3]	TX(__)
Rod Extension over standard (specify additional length)[3]	RX(__)
Stainless Steel Fasteners (125 PSI Max)	SF
High Temperature Seals[4]	**HT
Rod Wiper	RW

[1] Stroke is reduced by .03" per bumper. Bumpers are rated to 150°F

[2] Overall length of cylinder may increase with this option.

[3] Consult factory for negative thread or rod extensions.

[4] Not available in single or reverse acting models.

* Not available in 9/16" bore.

F-Series Plus Cylinders

Single and Double acting

9/16" to 4" bore

Quality and durability in a compact, high performance cylinder!

The **Norgren F-Series Plus** offers a compact design using the highest quality components for dependable service and long life. All components of the F-Series Plus cylinder have been specifically selected to provide optimum reliability and performance.

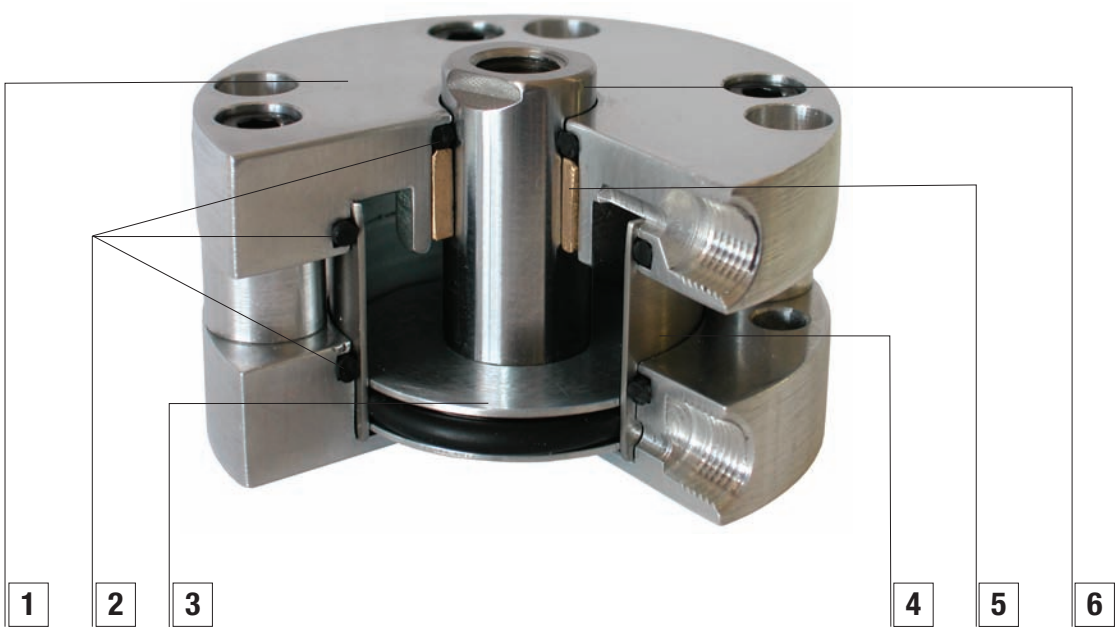

1 Head/Cap:
Aluminum alloy, clear anodized for corrosion resistance.

2 Seals:
Buna N, o-ring seals throughout

3 Piston:
Aluminum alloy piston is lightweight, yet strong with excellent wear characteristics.

4 Tube:
304 Stainless steel tube, polished and buffed I.D.

5 Rod Bearing:
Oil impregnated, bronze bearing, for long cylinder life and non-lube service.

6 Piston Rod:
303 Stainless steel, chrome plated for smooth finish and long seal life.

F-Series Plus Cylinders

Single and Double acting

9/16" to 4" bore

Force Factor Data

Bore	Code	Force Factor (Area) Extend	Retract
9/16"	(056)	0.25	0.20
3/4"	(075)	0.44	0.36
1-1/16"	(106)	0.89	0.69
1-1/2"	(150)	1.77	1.46
2"	(200)	3.14	2.70
2-1/2"	(250)	4.91	4.47
3"	(300)	7.07	6.47
4"	(400)	12.56	11.77

Force Output Formula
Cylinder Output Force = Force Factor (area) x Air Line Pressure (psi)

Ex: 1-1/16 bore cylinder operating at 80 psi:
Force exerted on the extend: 0.89 x 80 = 71.2 lbs.
Force exerted on the retract: 0.69 x 80 = 55.2 lbs.

Approximate Cylinder Weights (lbs.)

Bore	Code	FP Base	FP Adder per 1/8" stroke	FPD Base	FPD Adder per 1/8" stroke	FPR, FPC Base	FPR, FPC Adder per 1/8" stroke	Nose Mount Option Adder to Base Weight
9/16"	(056)	0.075	0.005	0.081	0.009	0.094	0.005	0.006
3/4"	(075)	0.119	0.006	0.131	0.013	0.138	0.006	0.013
1-1/16"	(106)	0.306	0.019	0.363	0.025	0.331	0.019	0.069
1-1/2"	(150)	0.600	0.025	0.700	0.038	0.669	0.025	0.113
2"	(200)	0.813	0.031	0.950	0.044	0.894	0.031	0.169
2-1/2"	(250)	1.400	0.038	1.750	0.050	1.581	0.038	0.194
3"	(300)	1.806	0.050	2.375	0.069	2.050	0.050	0.219
4"	(400)	3.481	0.063	4.488	0.081	3.881	0.063	0.369

Spring Forces

Bore	Code	Maximum Force (lbs.)	Spring Rates 0.12 to 1" Stroke (lb/in)	1.001 to 2" Stroke (lb/in)	2.001 to 3" Stroke (lb/in)	3.001 to 4" Stroke (lb/in)
9/16"	(056)	5.25	4.25	1.75	1.24	0.88
3/4"	(075)	10.00	6.00	2.50	1.76	1.25
1-1/16"	(106)	11.50	6.00	2.50	1.76	1.25
1-1/2"	(150)	13.00	5.50	2.25	1.60	1.13
2"	(200)	13.00	5.50	2.25	1.60	1.13
2-1/2"	(250)	25.00	6.50	2.75	1.93	1.38
3"	(300)	25.00	6.50	2.75	1.93	1.38
4"	(400)	25.00	6.50	2.75	1.93	1.38

Overall length adders for options

Length Adder (Add to standard cataloged length)

Bore	Code	LF* (Low Friction Seals)	HD** (Heavy Duty Cap)	PS (Magnetic Piston) FP, FPD	FPR	FPC
9/16"	(056)	0.25	0.13	0.88	0.63	0.38
3/4"	(075)	0.25	0.13	0.88	0.88	0.88
1-1/16"	(106)	0.38	0.19	0.88	0.88	0.88
1-1/2"	(150)	0.38	0.19	0.88	0.88	0.88
2"	(200)	0.38	0.19	0.88	0.88	0.88
2-1/2"	(250)	0.38	0.25	0.88	0.88	0.88
3"	(300)	0.50	0.25	0.88	0.88	0.88
4"	(400)	0.50	0.38	0.88	0.88	0.88

*For Low Friction Seals used in combination with a magnetic piston, use the PS length adder only.
**For Heavy Duty End Cap used in combination with a magnetic piston, use both HD and PS length adders.

F-Series Plus Cylinders

Single and Double acting

9/16" to 4" bore

Dimensions in inches

FP (basic model BAM)
Double acting, single rod end

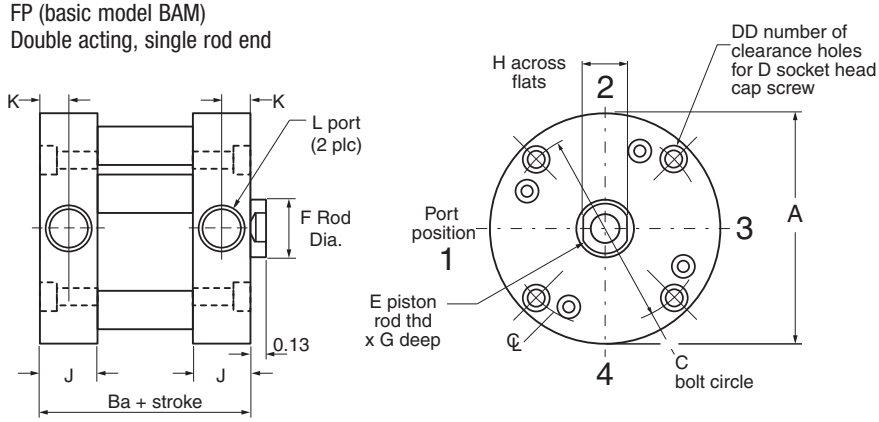

FPD (basic model BAM)
Double acting, double rod end

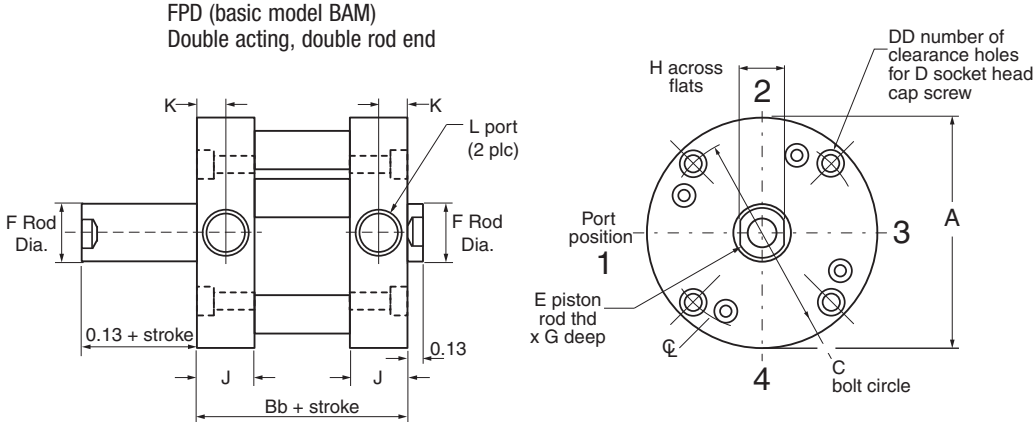

FP - Double acting, single rod end
FPD - Double acting, double rod end

Bore	Code	A	Ba* (FP)	Bb* (FPD)	C	DD	D	E Thread	G depth	F	H	J	K	L
9/16"	(056)	1.12	0.56	0.69	0.88	2	#4	8-32 UNC	.46	.25	.22	.34	.14	10-32 UNF
3/4"	(075)	1.50	0.56	0.69	1.22	4	#6	10-32 UNC	.46	.31	.25	.34	.14	10-32 UNF
1-1/16"	(106)	2.00	0.88	0.94	1.69	4	#6	5/16-24 UNF	.70	.50	.44	.50	.25	1/8 NPT
1-1/2"	(150)	2.62	0.88	1.00	2.19	4	#10	3/8-24 UNF	.70	.63	.50	.50	.25	1/8 NPT
2"	(200)	3.12	0.95	1.06	2.69	4	#10	1/2-20 UNF	.70	.75	.63	.53	.25	1/8 NPT
2-1/2"	(250)	3.75	1.19	1.31	3.25	4	1/4	1/2-20 UNF	.70	.75	.63	.66	.33	1/4 NPT
3"	(300)	4.25	1.25	1.38	3.78	4	1/4	5/8-18 UNF	.73	.88	.75	.69	.33	1/4 NPT
4"	(400)	5.50	1.56	1.69	4.94	4	5/16	3/4-16 UNF	.80	1.00	.88	.84	.42	3/8 NPT

* Length may increase with certain option combinations.

NORGREN ENGINEERING ADVANTAGE

F-Series Plus Cylinders

Single and Double acting

9/16" to 4" bore

Dimensions in inches

FPR (basic model BAM)
Single acting, spring return

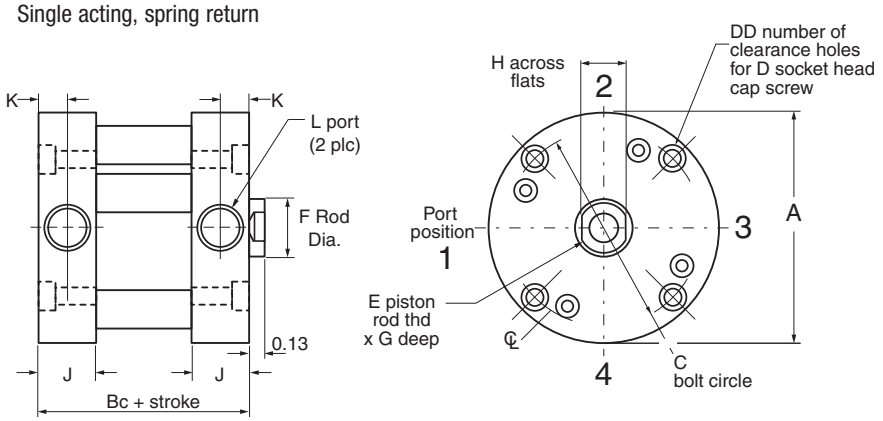

FPC (basic model BAM)
Single acting, spring extend

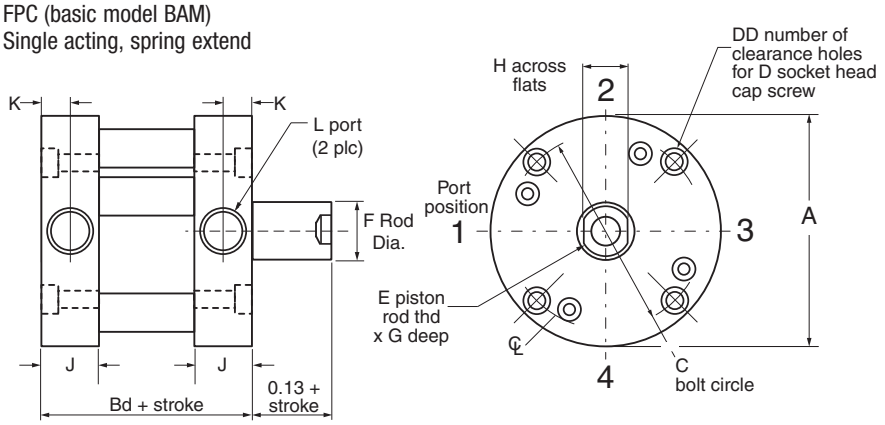

FPR - Single acting, spring return
FPC - Single acting, spring extend

			Bc* (FPR)				Bd* (FPC)													
			0-1"	1.001-2"	2.001-3	3.001-4"	0-1"	1.001-2"	2.001-3"	3.001-4"	C	DD	D	E Thread	G depth	F	H	J	K	L
Bore	Code	A	Stk.	Stk.	Stk.	Stk.	Stk.	Stk.	Stk.	Stk.										
9/16"	(056)	1.12	0.81	1.38	1.96	2.52	1.06	1.62	2.14	2.70	0.88	2	#4	8-32 UNC	.46	.25	.22	.34	.14	10-32 UNF
3/4"	(075)	1.50	0.81	1.38	1.94	2.50	1.06	1.62	2.19	2.75	1.22	4	#6	10-32 UNC	.46	.31	.25	.34	.14	10-32 UNF
1-1/16"	(106)	2.00	0.88	1.50	2.13	2.75	1.38	2.00	2.63	3.25	1.69	4	#6	5/16-24 UNF	.70	.50	.44	.50	.25	1/8 NPT
1-1/2"	(150)	2.62	0.88	1.50	2.13	2.75	1.38	2.00	2.63	3.25	2.19	4	#10	3/8-24 UNF	.70	.63	.50	.50	.25	1/8 NPT
2"	(200)	3.12	0.94	1.56	2.19	2.81	1.44	2.06	2.69	N/A	2.69	4	#10	1/2-20 UNF	.70	.75	.63	.53	.25	1/8 NPT
2-1/2"	(250)	3.75	1.19	2.06	2.94	3.81	1.94	2.81	2.81	N/A	3.25	4	1/4	1/2-20 UNF	.70	.75	.63	.66	.33	1/4 NPT
3"	(300)	4.25	1.25	2.12	3.00	3.88	2.00	2.88	2.88	N/A	3.78	4	1/4	5/8-18 UNF	.73	.88	.75	.69	.33	1/4 NPT
4"	(400)	5.50	1.56	2.44	3.31	4.19	2.31	3.19	3.19	N/A	4.94	4	5/16	3/4-16 UNF	.80	1.00	.88	.84	.42	3/8 NPT

* Length may increase with certain option combinations.

Norgren.com/usa – 303.794.2611 – help@amer.norgren.com

F-Series Plus Cylinders

Single and Double acting

9/16" to 4" bore

Dimensions in inches

Tunnion mount (TMF, TMR, TMB)

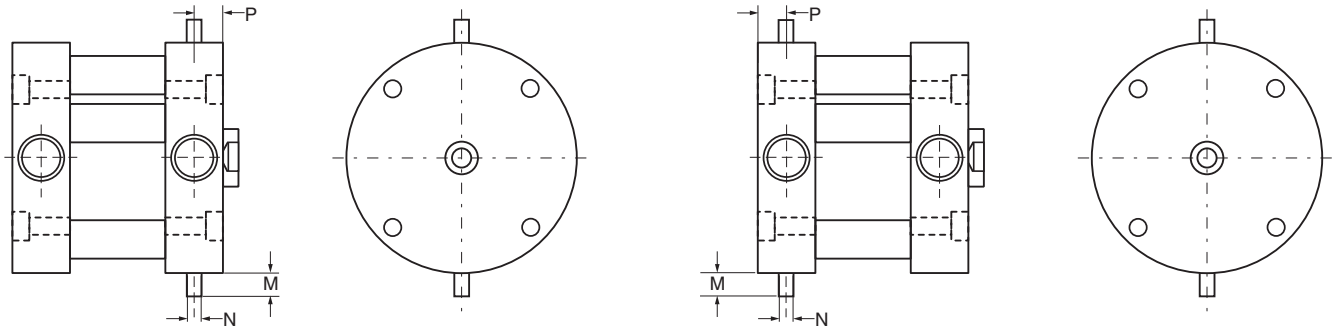

Threaded mounting holes
(THF, THC, THB) 3/4" bore and larger

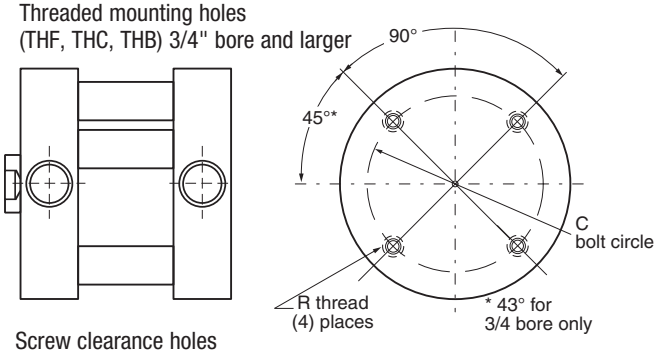

Threaded mounting holes
(THF, THC, THB) 9/16" bore only

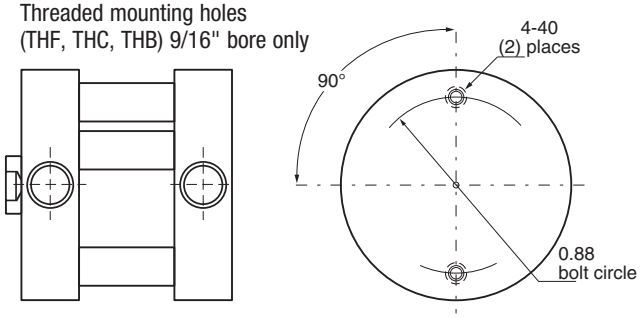

Screw clearance holes
(SCF, SCR, SCB)

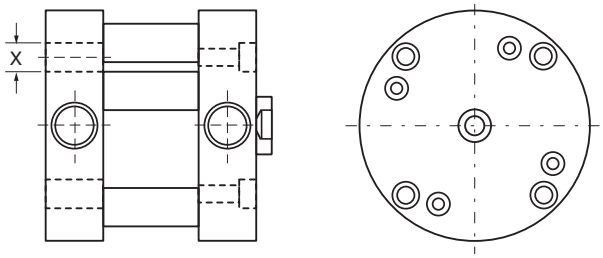

Pivot mount (PTM)

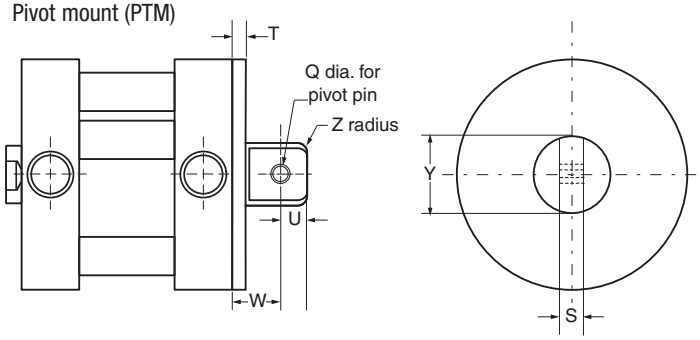

Nose mount (NMT)

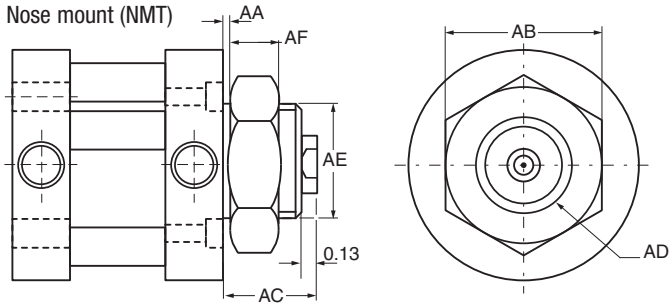

Nose Mount
Maximum Torque Recommendation

Bore	Code	Maximum Torque(ft-lb.)
9/16"	(056)	12
3/4"	(075)	28
1-1/16"	(106)	100
1-1/2"	(150)	120
2"	(200)	130
2-1/2"	(250)	130
3"	(300)	130
4"	(400)	150

Mounting Dimensions (in)

Bore	Code	AA	AB	AC	AD	AE	AF	C	M	N	P	Q	R	S	T	U	W	X	Y	Z
9/16"	(056)	0.06	0.75 Hex	0.38	1/2-20 UNF-2A	0.50	0.31	0.88	N/A	N/A	N/A	0.19	#4-40 UNC	0.38	0.19	0.25	0.75	0.17	0.63	0.19
3/4"	(075)	0.06	0.75 Hex	0.38	5/8-18 UNF-2A	0.62	0.25	1.22	0.31	0.12	0.17	0.19	#6-32 UNC	0.38	0.19	0.25	0.75	0.23	0.75	0.19
1-1/16"	(106)	0.13	1.50 Hex	0.75	1-14 UNS-2A	1.00	0.55	1.69	0.50	0.25	0.25	0.19	#6-32 UNC	0.38	0.25	0.25	0.81	0.25	0.75	0.19
1-1/2"	(150)	0.13	1.88 Hex	0.75	1-1/4-12 UNF-2A	1.25	0.52	2.19	0.50	0.25	0.25	0.38	#10-24 UNC	0.75	0.25	0.44	1.19	0.34	1.38	0.38
2"	(200)	0.19	1.88 Hex	0.88	1-3/8-12 UNF-2A	1.38	0.52	2.69	0.50	0.25	0.25	0.38	#10-24 UNC	0.75	0.31	0.44	1.25	0.34	1.38	0.38
2-1/2"	(250)	0.25	1.88 Hex	1.00	1-3/8-12 UNF-2A	1.38	0.52	3.25	0.63	0.31	0.33	0.38	1/4-20 UNC	0.75	0.38	0.44	1.31	0.41	1.38	0.38
3"	(300)	0.25	1.88 Hex	1.00	1-3/8-12 UNF-2A	1.38	0.52	3.78	0.63	0.31	0.33	0.63	1/4-20 UNC	1.00	0.38	0.56	1.69	0.41	1.88	0.38
4"	(400)	0.19	2.62 Hex	1.12	1-3/4-12 UN-2A	1.75	0.88	4.94	0.75	0.38	0.42	0.63	5/16-18 UNC	1.00	0.44	0.56	1.75	0.50	1.88	0.38

NORGREN ENGINEERING ADVANTAGE

F-Series Plus Cylinders

Single and Double acting

9/16" to 4" bore

Dimensions in inches

Rod Wiper (RW)

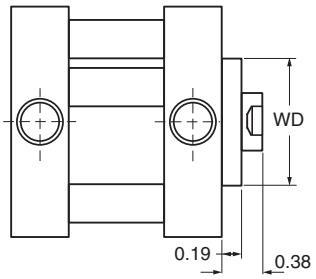

Bore	Code	WD
9/16"	(056)	0.56
3/4"	(075)	0.69
1-1/16"	(106)	0.88
1-1/2"	(150)	1.00
2"	(200)	1.13
2-1/2"	(250)	1.13
3"	(300)	1.25
4"	(400)	1.38

Male Rod End (TM(_))

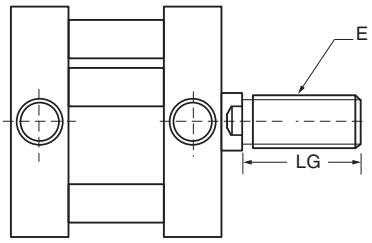

Bore	Code	E		
		Fine	Course	LG
9/16"	(056)	#8-32 UNC	N/A	0.38
3/4"	(075)	#10-32 UNF	#10-24 UNC	0.38
1-1/16"	(106)	5/16-24 UNF	5/16-18 UNC	0.50
1-1/2"	(150)	3/8-24 UNF	3/8-16 UNC	0.50
2"	(200)	1/2-20 UNF	1/2-13 UNC	0.63
2-1/2"	(250)	1/2-20 UNF	1/2-13 UNC	0.63
3"	(300)	5/8-18 UNF	5/8-11 UNC	0.75
4"	(400)	3/4-16 UNF	3/4-10 UNC	0.75

Clevis Bracket

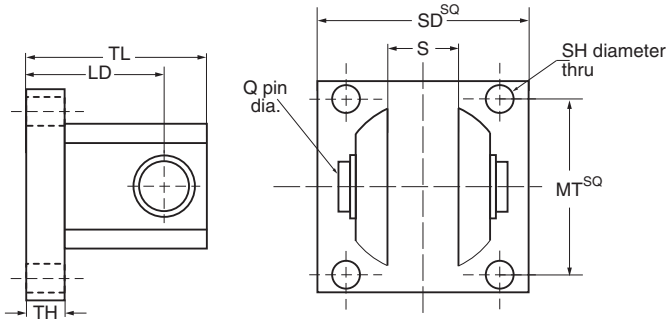

Bore	Code	Part Number	LD	MT	Q	S	SH	SD	TH	TL
9/16" 3/4" 1-1/16"	(056) (075) (106)	FCB-1	0.56	0.75	0.19	0.39	#6	1.00	0.16	0.78
1-1/2" 2" 2-1/2"	(150) (200) (250)	FCB-2	0.94	1.38	0.38	0.75	#10	1.75	0.22	1.34
3" 4"	(300) (400)	FCB-3	1.25	2.00	0.63	1.00	0.25	2.50	0.25	1.81

F-Series Plus Cylinders

Single and Double acting

9/16" to 4" bore

Dimensions in inches

Trunnion Block Mount

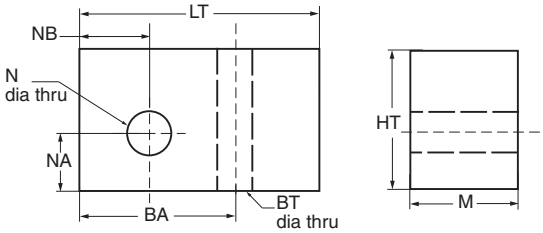

Bore	Code	Part Number	BA	BT	HT	LT	M	N	NA	NB
3/4"	(075)	FTB-1	0.56	#10	0.63	1.12	0.31	0.13	0.30	0.22
1-1/16" 1-1/2" 2"	(106) (150) (200)	FTB-2	0.81	0.25	0.88	1.50	0.50	0.25	0.38	0.31
2-1/2" 3"	(250) (300)	FTB-3	0.94	0.31	1.00	1.63	0.63	0.31	0.45	0.38
4"	(400)	FTB-4	1.06	0.38	1.25	1.88	0.75	0.38	0.55	0.44

Rod Clevis

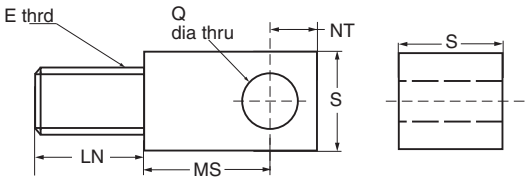

Bore	Code	Part Number	E	LN	MS	NT	Q	S
9/16"	(056)	FRE-1	#8-32 UNC	0.38	0.47	0.25	0.19	0.38
3/4"	(075)	FRE-2	#10-32 UNF	0.38	0.47	0.25	0.19	0.38
1-1/16"	(106)	FRE-3	5/16-24 UNF	0.63	0.47	0.25	0.19	0.38
1-1/2"	(150)	FRE-4	3/8-24 UNF	0.63	0.75	0.44	0.38	0.75
2" 2-1/2"	(200) (250)	FRE-5	1/2-20 UNF	0.75	0.75	0.44	0.38	0.75
3"	(300)	FRE-6	5/8-18 UNF	0.88	1.00	0.63	0.63	1.00
4"	(400)	FRE-7	3/4-16 UNF	0.88	1.00	0.63	0.63	1.00

NORGREN
ENGINEERING ADVANTAGE

FPT Series F-Plus Twin Rod Non-Rotating Cylinders

3/4" - 2" bores

Technical Data

Medium:

Filtered, lubricated or non-lubricated, compressed air

Maximum Operating Pressure:

200 psig (13.6 bar)

Temperature Range*:

Standard nitrile seals:
-40°F to 200°F (-40°C to 93°C)
Viton / High temp seals:
-20°F to 400°F (-29°C to 205°C)

* With dew point of supply air less than air temperature below 36°F (2°C).

Lubrication:

All FPT cylinders are pre-lubricated during assembly with a Teflon® based grease for non-lube service and long life.

Materials:

Cylinder Body:
304 Stainless Steel
Head and Cap:
Clear anodized aluminum
Tooling Plate:
Clear anodized aluminum
Piston Rods:
303 stainless steel
Rod Bearings:
Oil impregnated sintered bronze
Piston:
Aluminum Alloy
Rod & Piston Seals:
Nitrile

Options selector

FPT 106 x 1.750 - BAM - PS

Series	Substitute
FPT F-Plus Twin Rod Cylinder	FPT

Bore	Substitute
3/4"	075
1-1/16"	106
1-1/2"	150
2"	200

Stroke
Increments of 1/16"

Options	Substitute
Counterbored Tool Plate	CTP
Viton / High Temp seals	HT
Switch rail and position	M1, M2, M3, M4
Magnetic Piston*	PS
Alternate port location	PL(__)
Rotated Pivot Mount (Pivot mount rotated 90° from standard)	RM
Rotated Tooling Plate (Tooling plate and rod axis will be vertical with respect to the ports)	RT
Rod extension over std. (Specify additional length)	RX(_)
Stainless Steel Fasteners (125 psi max)	SF

*Magnetic option used in combination with viton (HT) option is not reliable above 200°F. Overall cylinder length increases with magnetic option (see dimensional tables).

Mounting Options	Substitute
Basic Mount	BAM
*Screw Clearance Holes Front	SCF
*Screw Clearance Holes Rear	SCR
*Screw Clearance Holes Both	SCB
Front Trunnion	TMF
Rear Trunnion	TMR
Trunnion Both Ends	TMB
Pivot Mount	PTM
Threaded Mounting Holes Front	THF
Threaded Mounting Holes Rear	THC
Threaded Mounting Holes Both Ends	THB

* Screw clearance to allow bolt head to pass through - no counter bores

Norgren.com/usa – 303.794.2611 – help@amer.norgren.com

FPT Twin Rod

Single and Double acting
9/16" to 4" bore

The Norgren FPT Series twin rod cylinder features a dual rod, compact design for non-rotating, space saving results. The two piston rods are connected externally by an aluminum tooling plate, providing rod support and mounting flexibility.

1 **Head/Cap:** Head and Cap aluminum alloy, clear anodized for corrosion resistance.

2 **Piston Seals:** Lip-Type nitrile piston seals are wear compensating for long life.

3 **Piston:** Solid Aluminum piston is strong, yet lightweight for low inertia.

4 **Piston Rods:** Chrome plated 303 series Stainless Steel piston rods for smooth operation and corrosion resistance.

5 **Tube:** 304 Stainless steel cylinder body, for corrosion resistance

6 **Rod Seal:** Lip-Type nitrile rod seal, pressure energized and wear compensating.

7 **Rod Bearings:** Oil impregnated, sinterend bonze rod bearings provide exceptional rod support, and optimal cycle life.

8 **Tooling plate:** Clear anodized aluminum

9 **Tube Seals:** Nitrile, o-ring tube seals

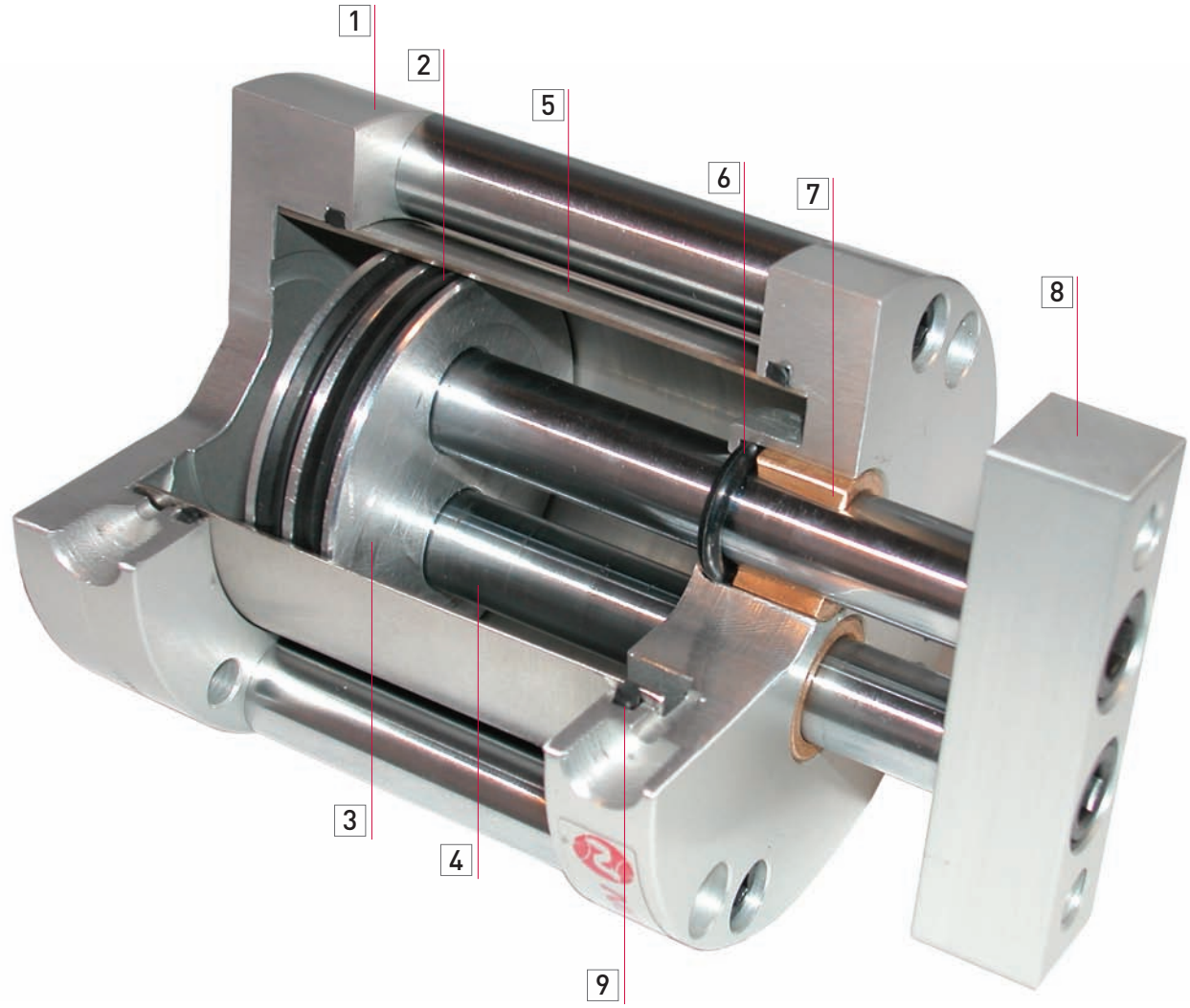

NORGREN ENGINEERING ADVANTAGE

FPT Twin Rod

Single and Double acting
9/16" to 4" bore

FPT (Basic model BAM) Double acting, single rod end

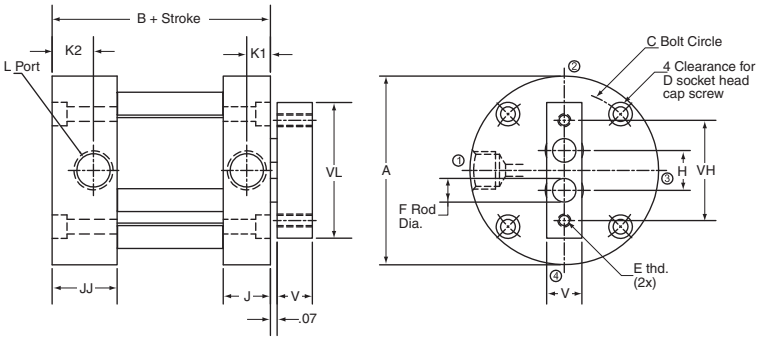

Bore	Code	A	B*	C	D	E	F	H	J
3/4"	075	1.50	0.94	1.22	#6	#6-32 UNC	0.19	0.332	0.34
1-1/16"	106	2.00	1.31	1.69	#6	#8-32 UNC	0.25	0.422	0.50
1-1/2"	150	2.63	1.31	2.19	#10	1/4-20 UNC	0.38	0.562	0.50
2"	200	3.13	1.38	2.69	#10	5/16-18 UNC	0.50	0.750	0.53

Bore	Option	JJ	K1	K2	L	V	VH	VL
3/4"	075	0.47	0.14	0.27	#10-32	0.38	0.88	1.25
1-1/16"	106	0.69	0.25	0.44	1/8 NPT	0.38	1.06	1.44
1-1/2"	150	0.69	0.25	0.44	1/8 NPT	0.50	1.50	2.00
2"	200	0.72	0.25	0.44	1/8 NPT	0.63	1.88	2.50

NOTE: PS (magnetic piston) option adds 0.63" to the overall length.
A minimim stroke of 0.375" is required to sense the end of stroke extended.

Trunnion mount (TMF, TMR, TMB)

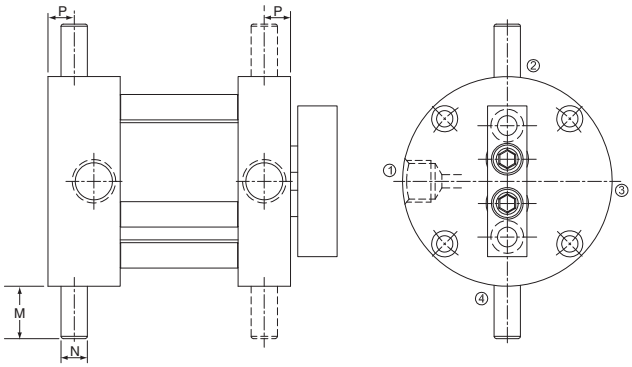

Bore	Code	M	N	P
3/4"	075	0.31	0.13	0.17
1-1/16"	106	0.50	0.25	0.25
1-1/2"	150	0.50	0.25	0.25
2"	200	0.50	0.25	0.25

Threaded mounting holes (THF, THC, THB)

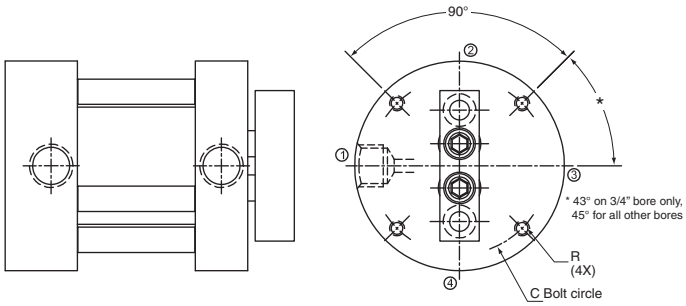

Bore	Code	C	R
3/4"	075	1.22	#6-32 UNC
1-1/16"	106	1.69	#6-32 UNC
1-1/2"	150	2.19	#10-24 UNC
2"	200	2.69	#10-24 UNC

Screw clearance mounting holes (SCF, SCR, SCB)

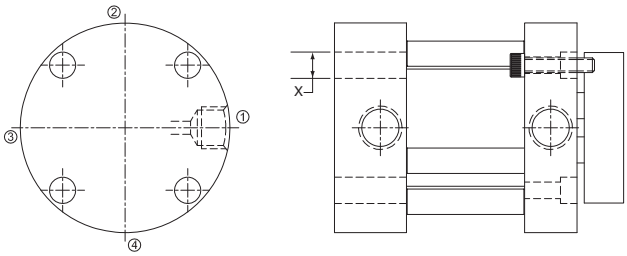

Bore	Code	X
3/4"	075	0.23
1-1/16"	106	0.25
1-1/2"	150	0.34
2"	200	0.34

Norgren.com/usa – 303.794.2611 – help@amer.norgren.com

FPT Twin Rod

Single and Double acting
9/16" to 4" bore

Counterbored tooling plate (CTP option)

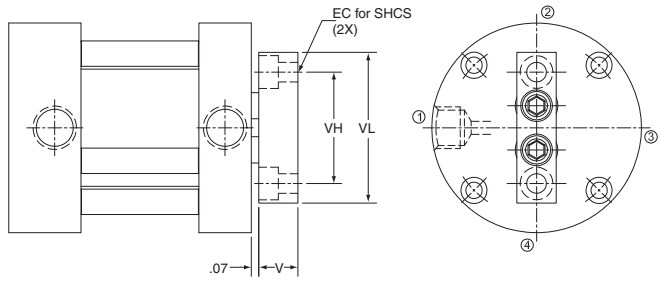

Bore	Code	EC	V	VH	VL
3/4"	075	#6	0.38	0.88	1.25
1-1/16"	106	#8	0.38	1.06	1.44
1-1/2"	150	1/4	0.50	1.50	2.00
2"	200	5/16	0.63	1.88	2.50

Pivot Mount (PTM)

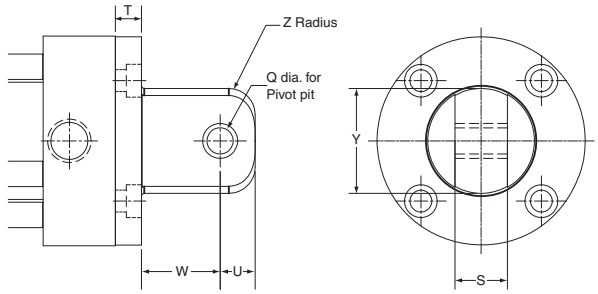

Bore	Code	Q	S	T	U	Y	W	Z
3/4"	075	0.19	0.38	0.19	0.25	0.75	0.75	0.19
1-1/16"	106	0.19	0.38	0.25	0.25	0.75	0.81	0.19
1-1/2"	150	0.38	0.75	0.25	0.44	1.38	1.19	0.38
2"	200	0.38	0.75	0.31	0.44	1.38	1.25	0.38

Clevis bracket

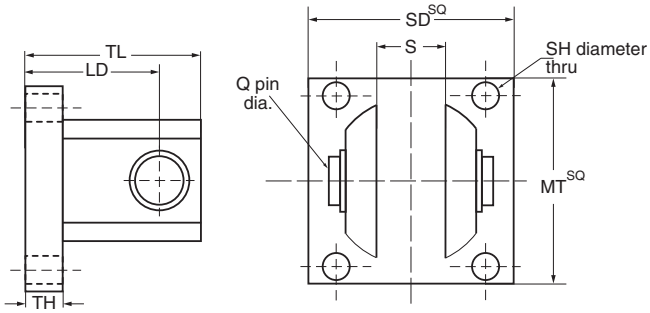

Bore	Code	Part number	LD	MT	Q	S	SH	SD	TH	TL
3/4"	(075)	FCB-1	0.56	0.75	0.19	0.39	#6	1.00	0.16	0.78
1-1/16"	(106)									
1-1/2"	(150)	FCB-2	0.94	1.38	0.38	0.75	#10	1.75	0.22	1.34
2"	(200)									

Trunnion block mount

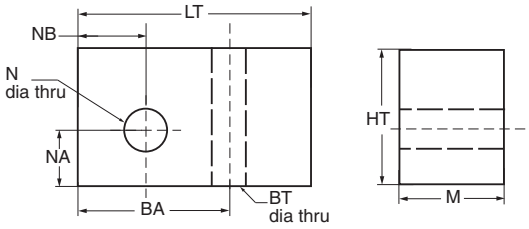

Bore	Code	Part number	BA	BT	HT	LT	M	N	NA	NB
3/4"	(075)	FTB-1	0.56	#10	0.63	1.12	0.31	0.13	0.30	0.22
1-1/16"	(106)									
1-1/2"	(150)	FTB-2	0.81	0.25	0.88	1.50	0.50	0.25	0.38	0.31
2"	(200)									

Repair Kits

Bore	Code	Part number
3/4"	(075)	CKFPT-075
1-1/16"	(106)	CKFPT-106
1-1/2"	(150)	CKFPT-150
2"	(200)	CKFPT-200

Kit includes 2 rod seals, 2 piston seals, and 2 tube seals

Weights

		Approximate weights (lbs.)	
Bore	Code	Base weight	Adder per 1/8" stk.
3/4"	(075)	0.169	0.0063
1-1/16"	(106)	0.400	0.0313
1-1/2"	(150)	0.763	0.0438
2"	(200)	1.150	0.0563

NORGREN
ENGINEERING ADVANTAGE

Series 91000 Compact Actuators

DC/91000/M, DC/93000/M

Single acting

Ø 12 ... 63 mm

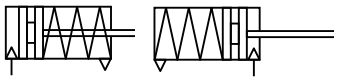

Low friction, long life seal design

Fully non-corrodible specification

Corrosion resistant specification

Non-lube operation

Optional non-rotating piston rod

Standard magnetic piston for full control system versatility

Technical data

Medium:

Compressed air, filtered, lubricated or non-lubricated

Operation:

DC/91000/M Single acting, non-cushioned, magnetic piston spring return

DC/93000/M Single acting, non-cushioned, magnetic piston spring extend

Operating pressure:

14.5 to 145 psi (1 to 10 bar)

Operating temperature:

23°F* to 176°F (-5°C to +80°C)

Consult our Technical Service for use below 35°F (+2°C)

Materials

Barrel & end caps: anodized aluminum alloy

Piston rod: stainless steel (Ø 12 to 40 mm Austenitic, Ø 50 and 63 mm Martensitic)

Seals: polyurethane and/or nitrile rubber

Standard models

Ø	Piston rod Ø	Port size	Magnetic, standard Spring return	Spring extend	Service kit	Magnetic, non-rotating Spring return	Spring extend	Service kit
12	6	10-32	DC/91012/M/*	DC/93012/M/*	–	–	–	–
16	8	10-32	DC/91016/M/*	DC/93016/M/*	–	RC/91016/N2/*	RC/93016/N2/*	–
20	10	10-32	DC/91020/M/*	DC/93020/M/*	–	RC/91020/N2/*	RC/93020/N2/*	–
25	12	10-32	DC/91025/M/*	DC/93025/M/*	–	RC/91025/N2/*	RC/93025/N2/*	–
32	16	1/8 NPT	DC/91032/M/*	DC/93032/M/*	–	RC/91032/N2/*	RC/93032/N2/*	–
40	16	1/8 NPT	DC/91040/M/*	DC/93040/M/*	–	RC/91040/N2/*	RC/93040/N2/*	–
50	20	1/8 NPT	DC/91050/M/*	DC/93050/M/*	QM/92050/00	RC/91050/N2/*	RC/93050/N2/*	QM/92050/N2/00
63	20	1/4 NPT	DC/91063/M/*	DC/93063/M/*	QM/92063/00	RC/91063/N2/*	RC/93063/N2/*	QM/92063/N2/00

* Insert stroke length in inches.

Ø	DC/91000/M Theoretical forces lbs (nm) at 87 psi (6 bar) Outstroke		DC/93000/M Theoretical forces lbs (nm) at 87 psi (6 bar) Instroke	
12	12.8 (57)	1.57 (7)	9.0 (40)	1.57 (7)
16	23.2 (103)	2.81 (12.5)	16.2 (72)	2.81 (12.5)
20	36.2 (161)	3.26 (14.5)	26.8 (119)	3.26 (14.5)
25	59.3 (264)	4.50 (20)	44.3 (197)	4.50 (20)
32	97.1 (432)	7.19 (32)	70.0 (311)	7.19 (32)
40	154.4 (687)	9.89 (44)	127.3 (566)	9.89 (44)
50	245.9 (1094)	12.70 (56.5)	203.7 (906)	12.70 (56.5)
63	397.9 (1770)	16.75 (74.5)	355.6 (1582)	16.75 (74.5)

F1 = Return force of spring (N).

Options selector

DC/9★★★★/★★/★★/★★

Piston Rod	Substitute
Chrome plated stainless steel	D
Non-chrome plated stainless steel (for N2 option only)	R

Cylinder	Substitute
NPT ports, inch threads & stroke	C
ISO G ports, metric threads & stroke	M

Operating	Substitute
Single acting spring return	1
Single acting spring extend	3

Cylinder diameters (mm)	Substitute
12	012
16	016
20	020
25	025
32	032
40	040
50	050
63	063

Specify rod extension for MU option

Stroke length (inch for NPT, mm for ISO G)

Bore	Max Stroke
ø 1/2", 5/8"	3/8"
ø 3/4", 1", 1-1/4", 1-1/2" 2", 2-1/2"	2"
ø 12, 16 mm	10 mm
ø 20, 25, 32, 40, 50, 63 mm	50 mm

Options	Substitute
Magnetic piston	M
Rod extensions	MU
Non-rotating piston rod	N2

Note: Disregard option positions not used. For combinations of cylinder variants consult our Technical Service.

Norgren.com/usa – 303.794.2611 – help@amer.norgren.com

Series 91000 Compact Actuators

DC/91000/M, DC/93000/M

Single acting

Ø 12 ... 63 mm

Mountings*

Ø	B & G Flange Mount	C Foot Bars	F Rod Clevis	Rod Jam Nut	Male Rod Stud**	Adapter**	Assembly Kit - Back to Back cylinders
		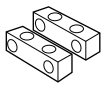					
12	QC/90012/22	QC/90012/21	RC-12	C-76-36	C-653-24-00J	–	QC/92012/55
16	QC/90016/22	QC/90016/21	RC-16	C-76-37	C-653-04-00M	–	QC/92016/55
20	QC/90020/22	QC/90020/21	RC-20	C-76-225	C-653-25-00P	–	QC/92020/55
25	QC/90025/22	QC/90025/21	RC-25	C-76-03A	C-653-08-01A	–	QC/92025/55
32	QC/90032/22	QC/90032/21	RC-32	C-76-04A	C-653-11-01A	–	QC/92032/55
40	QC/90040/22	QC/90040/21	RC-32	C-76-04A	C-653-11-01A	–	QC/92040/55
50	QC/90050/22	QC/90050/21	RC-50	–	C-653-14-01E	M/P71470/1	QC/92050/55
63	QC/90063/22	QC/90063/21	RC-63	–	C-653-16-01P	M/P71470/2	QC/92063/55

*NPT. For additional mounting options go to the Norgren web link.

**For attaching F mounting to female piston rod thread.

Standard cylinders

DC/91000/M (spring return)

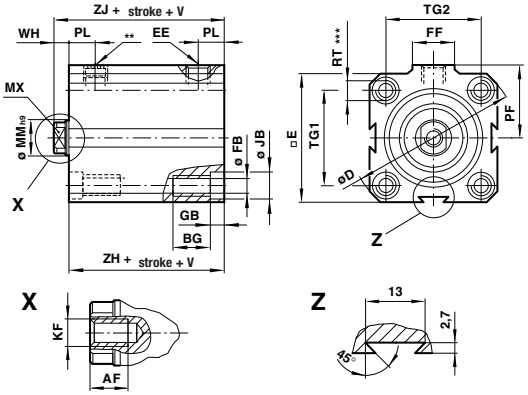

DC/93000/M (spring extend)

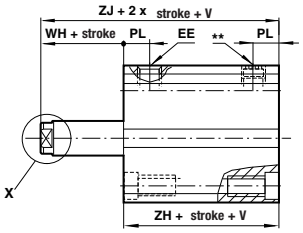

** Port thread with inserted filter, do not obstruct

*** Only the 4 front holes are tapped on stroke lengths of less than:
Ø 25 and 32 mm: 5 mm, Ø 40 and 63 mm: 15 mm (.../N2: 5 mm), Ø 50 mm: 10 mm

Note: Ø 12 to 20 mm feature only two side dovetails.

DC/91000/N2 – Cylinders with non-rotating piston rod - spring return

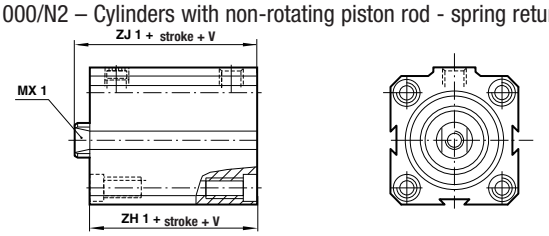

DC/93000/N2 – Cylinders with non-rotating piston rod - spring extend

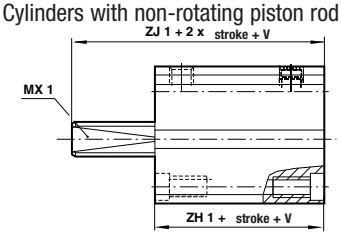

Ø	AF	BG	Ø D	❑ E	EE	Ø FB	FF	GB	Ø JB	KF	Ø MM (h9)	MX (A/F)	MX1 (A/F)	PF
12	0.24 (6)	0.35 (9)	1.28 (32.5)	0.98 (25)	10-32	0.13 (3.3)	0.39 (10)	0.14 (3.5)	0.24 (6)	4-40 (M3)	0.24 (6)	0.20 (5)	–	0.59 (15)
16	0.28 (7)	0.35 (9)	1.44 (36.5)	1.10 (28)	10-32	0.13 (3.3)	0.39 (10)	0.14 (3.5)	0.24 (6)	8-32 (M4)	0.31 (8)	0.24 (6)	0.24 (6)	0.67 (17)
20	0.31 (8)	0.35 (9)	1.63 (41.5)	1.26 (32)	10-32	0.13 (3.3)	0.39 (10)	0.14 (3.5)	0.24 (6)	10-32 (M5)	0.39 (10)	0.31 (8)	0.31 (8)	0.77 (19.5)
25	0.35 (9)	0.47 (12)	1.89 (48)	1.46 (37)	10-32	0.17 (4.2)	0.39 (10)	0.18 (4.5)	0.30 (7.5)	1/4-28 (M6)	0.47 (12)	0.39 (10)	0.39 (10)	0.87 (22)
32	0.47 (12)	0.47 (12)	2.28 (58)	1.77 (45)	1/8 NPT	0.17 (4.2)	0.71 (18)	0.18 (4.5)	0.30 (7.5)	5/16-24 (M8)	0.63 (16)	0.51 (13)	0.51 (13)	1.08 (27.5)
40	0.47 (12)	0.63 (16)	2.81 (71.5)	2.17 (55)	1/8 NPT	0.27 (6.8)	0.71 (18)	0.26 (6.5)	0.41 (10.5)	5/16-24 (M8)	0.63 (16)	0.51 (13)	0.51 (13)	1.24 (31.5)
50	0.55 (14)	0.63 (16)	3.19 (81)	2.48 (63)	1/8 NPT	0.27 (6.8)	0.71 (18)	0.26 (6.5)	0.41 (10.5)	3/8-24 (M10)	0.79 (20)	0.67 (17)	0.63 (16)	1.46 (37)
63	0.63 (16)	0.79 (20)	4.09 (104)	3.15 (80)	1/4 NPT	0.33 (8.5)	0.87 (22)	0.33 (8.5)	0.53 (13.5)	7/16-20 (M12)	0.79 (20)	0.67 (17)	0.63 (16)	1.89 (48)

Ø	PL	RT	TG 1	TG 2	V (strokes) 0 ... 25 mm	V (strokes) 26 ... 50 mm	WH	ZH	ZH 1	ZJ	ZJ 1	lb (kg) 0 mm	lb (kg) 5 mm
12	0.28 (7)	8-32 (M4)	0.67 (17)	0.51 (13)	0.55 (14)	–	0.18 (4.5)	0.94 (24)	–	1.12 (28.5)	–	0.15 (0.07)	0.04 (0.02)
16	0.30 (7.5)	8-32 (M4)	0.79 (20)	0.79 (20)	0.59 (15)	–	0.22 (5.5)	0.96 (24.5)	1.36 (34.5)	1.18 (30)	1.57 (40)	0.20 (0.09)	0.04 (0.02)
20	0.30 (7.5)	8-32 (M4)	0.91 (23)	0.91 (23)	0.67 (17)	1.34 (34)	0.24 (6)	1.02 (26)	1.42 (36)	1.26 (32)	1.65 (42)	0.26 (0.12)	0.04 (0.02)
25	0.31 (8)	10-32 (M5)	1.06 (27)	1.06 (27)	0.71 (18)	1.42 (36)	0.26 (6.5)	1.12 (28.5)	1.52 (38.5)	1.38 (35)	1.77 (45)	0.37 (0.17)	0.07 (0.03)
32	0.35 (9)	10-32 (M5)	1.30 (33)	1.30 (33)	0.75 (19)	1.50 (38)	0.26 (6.5)	1.14 (29)	1.54 (39)	1.40 (35.5)	1.79 (45.5)	0.62 (0.28)	0.11 (0.05)
40	0.39 (10)	5/16-24 (M8)	1.61 (41)	1.61 (41)	0.79 (20)	1.57 (40)	0.26 (6.5)	1.24 (31.5)	1.63 (41.5)	1.50 (38)	1.89 (48)	0.97 (0.44)	0.13 (0.06)
50	0.41 (10.5)	5/16-24 (M8)	1.89 (48)	1.89 (48)	1.18 (30)	2.36 (60)	0.31 (8)	1.38 (35)	1.77 (45)	1.69 (43)	2.09 (53)	1.10 (0.50)	0.18 (0.08)
63	0.51 (13)	3/8-24 (M10)	2.40 (61)	2.40 (61)	1.18 (30)	2.36 (60)	0.31 (8)	1.67 (42.5)	2.07 (52.5)	2.00 (50.5)	2.38 (60.5)	1.98 (0.90)	0.24 (0.11)

Dimensions in inch (mm)

NORGREN ENGINEERING ADVANTAGE

Series 92000 Compact Actuators

DC/92000/M

Double acting

Ø 12 ... 100 mm

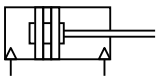

Low friction, long life seal design

Non-lube operation

Optional non-rotating or guided piston rod

Standard magnetic piston for full control system versatility

Technical data

Medium:

Compressed air, filtered, lubricated or non-lubricated

Operation:

Double acting, magnetic piston

Operating pressure:

14.5 to 145 psi (1 to 10 bar)

Operating temperature:

23°F* to 176°F (-5°C to +80°C)

Consult our Technical Service for use below 35°F (+2°C)

Materials

Barrel & end caps: anodized aluminum alloy

Piston rod: stainless steel (Ø 12 to 40 mm Austenitic, Ø 50 to 100 mm Martensitic)

Seals: polyurethane and/or nitrile rubber

Standard models

Ø	Piston rod Ø	Port size	Magnetic Standard	Magnetic Guided	Service kit	Magnetic Non-rotating	Service kit
12	6	10-32	DC/92012/M/*	–	–	–	–
16	8	10-32	DC/92016/M/*	DC/92016/N4/*	–	DC/92016/N2/*	–
20	10	10-32	DC/92020/M/*	DC/92020/N4/*	–	DC/92020/N2/*	–
25	12	10-32	DC/92025/M/*	DC/92025/N4/*	–	DC/92025/N2/*	–
32	16	1/8 NPT	DC/92032/M/*	DC/92032/N4/*	–	DC/92032/N2/*	–
40	16	1/8 NPT	DC/92040/M/*	DC/92040/N4/*	–	DC/92040/N2/*	–
50	20	1/8 NPT	DC/92050/M/*	DC/92050/N4/*	QM/92050/00	DC/92050/N2/*	QM/92050/N2/00
63	20	1/4 NPT	DC/92063/M/*	DC/92063/N4/*	QM/92063/00	DC/92063/N2/*	QM/92063/N2/00
80	25	1/4 NPT	DC/92080/M/*	DC/92080/N4/*	QM/92080/00	DC/92080/N2/*	QM/92080/N2/00
100	25	1/4 NPT	DC/92100/M/*	DC/92100/N4/*	QM/92100/00	DC/92100/N2/*	QM/92100/N2/00

*Insert stroke length in inches.

Options selector

★DC/92★★★/★★/★★★/★★

Special variants #

	Substitute
Heat resistant seals, 150°C max.	T

#Ø 32 to 100 mm bore.

Piston Rod

	Substitute
Chrome plated stainless steel	D
Non-chrome plated stainless steel (for N2 option only)	R

Cylinder

	Substitute
NPT ports, inch threads & stroke	C
ISO G ports, metric threads & stroke	M

Operating

	Substitute
Double acting	2

Cylinder diameters (mm)

	Substitute
12	012
16	016
20	020
25	025
32	032
40	040
50	050
63	063
80	080
100	100

Specify rod extension for MU option

Stroke length (inch for NPT, mm for ISO G)

Bore	Max Stroke
ø 1/2"	2"
ø 5/8", 3/4", 1"	8"
ø 1-1/4", 1-1/2"	10"
ø 2", 2-1/2", 3-1/8", 4"	12"
ø 12 mm	50 mmm
ø 16, 20, 25 mm	200 mm
ø 32, 40 mm	250 mm
ø 50, 63, 80, 100 mm	300 mm

Options (magnetic piston)

	Substitute
Standard	M
Rod extensions	MU
Non rotating piston rod	N2
Guided piston rod	N4
Double ended piston rod	JM

Note: Disregard option positions not used.

For combinations of cylinder options consult our Technical Service.

Norgren.com/usa – 303.794.2611 – help@amer.norgren.com

Series 92000 Compact Actuators

DC/92000/M

Double acting

Ø 12 ... 100 mm

Mountings*

Ø	B & G	C	F	Nut	Stud**	Adapter**	Assembly kit
12	QC/90012/22	QC/90012/21	RC-12	C-76-36	C-653-24-00J	–	QC/92012/55
16	QC/90016/22	QC/90016/21	RC-16	C-76-37	C-653-04-00M	–	QC/92016/55
20	QC/90020/22	QC/90020/21	RC-20	C-76-225	C-653-25-00P	–	QC/92020/55
25	QC/90025/22	QC/90025/21	RC-25	C-76-03A	C-653-08-01A	–	QC/92025/55
32	QC/90032/22	QC/90032/21	RC-32	C-76-04A	C-653-11-01A	–	QC/92032/55
40	QC/90040/22	QC/90040/21	RC-32	C-76-04A	C-653-11-01A	–	QC/92040/55
50	QC/90050/22	QC/90050/21	RC-50	C-76-05A	C-653-14-01E	M/P71470/1	QC/92050/55
63	QC/90063/22	QC/90063/21	RC-63	C-76-065A	C-653-16-01P	M/P71470/2	QC/92063/55
80	QM/90080/22	QM/90080/21	RC-80	C-76-12A	C-653-18-01J	M/P71470/3	QM/92080/55
100	QM/90100/22	QM/90100/21	RC-80	C-76-12A	C-653-18-01J	M/P71470/3	QM/92100/55

*NPT. For additional mounting options go to the Norgren web link.

**For attaching F mounting to female piston rod thread.

Standard cylinders
DC/92000/M

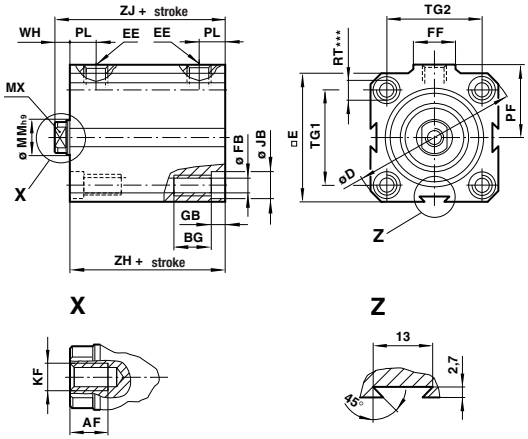

*** Only the 4 front holes are tapped on stroke lengths of less than:
Ø 25 and 32 mm: 5 mm, Ø 40 and 63 mm: 15 mm (.../N2: 5 mm),
Ø 50 and 80 mm: 10 mm, Ø 100 mm: 25 mm (.../N2: 15 mm).
Note: Ø 12 to 20 mm feature only two side dovetails.

Ø	AF	BG	Ø D	❑ E	EE	Ø FB	FF	GB	Ø JB	KF	Ø MM (h9)	MX (AF)
12	0.24 (6)	0.35 (9)	1.28 (32.5)	0.98 (25)	10-32 (M5)	0.13 (3.3)	0.39 (10)	0.14 (3.5)	0.24 (6)	4-40 (M3)	0.24 (6)	0.20 (5)
16	0.28 (7)	0.35 (9)	1.44 (36.5)	1.10 (28)	10-32 (M5)	0.13 (3.3)	0.39 (10)	0.14 (3.5)	0.24 (6)	8-32 (M4)	0.31 (8)	0.24 (6)
20	0.31 (8)	0.35 (9)	1.63 (41.5)	1.26 (32)	10-32 (M5)	0.13 (3.3)	0.39 (10)	0.14 (3.5)	0.24 (6)	10-32 (M5)	0.39 (10)	0.31 (8)
25	0.35 (9)	0.47 (12)	1.89 (48)	1.46 (37)	10-32 (M5)	0.17 (4.2)	0.39 (10)	0.18 (4.5)	0.30 (7.5)	1/4-28 (M6)	0.47 (12)	0.39 (10)
32	0.47 (12)	0.47 (12)	2.28 (58)	1.77 (45)	1/8 NPT (G 1/8)	0.17 (4.2)	0.71 (18)	0.18 (4.5)	0.30 (7.5)	5/16-24 (M8)	0.63 (16)	0.51 (13)
40	0.47 (12)	0.63 (16)	2.81 (71.5)	2.17 (55)	1/8 NPT (G 1/8)	0.27 (6.8)	0.71 (18)	0.26 (6.5)	0.41 (10.5)	5/16-24 (M8)	0.63 (16)	0.51 (13)
50	0.55 (14)	0.63 (16)	3.19 (81)	2.48 (63)	1/8 NPT (G 1/8)	0.27 (6.8)	0.71 (18)	0.26 (6.5)	0.41 (10.5)	3/8-24 (M10)	0.79 (20)	0.67 (17)
63	0.63 (16)	0.79 (20)	4.09 (104)	3.15 (80)	1/4 NPT (G 1/4)	0.33 (8.5)	0.87 (22)	0.33 (8.5)	0.53 (13.5)	7/16-20 (M12)	0.79 (20)	0.67 (17)
80	0.87 (22)	0.79 (20)	4.72 (120)	3.70 (94)	1/4 NPT (G 1/4)	0.33 (8.5)	0.87 (22)	0.33 (8.5)	0.53 (13.5)	1/2-20 (M16)	0.98 (25)	0.87 (22)
100	0.87 (22	0.98 (25)	5.85 (148.5)	4.59 (116.5)	1/4 NPT (G 1/4)	0.40 (10.2)	0.87 (22)	0.41 (10.5)	0.65 (16.5)	1/2-20 (M16)	0.98 (25)	0.87 (22)

Ø	MX1 (AF)	PF	PL	RT	TG1	TG2	WH	ZH	ZJ	lb (kg) 0 mm	lb (kg) 25 mm
12	-	0.59 (15)	0.28 (7)	8-32 (M4)	0.67 (17)	0.51 (13)	0.18 (4.5)	0.94 (24)	1.12 (28.5)	0.13 (0.06)	0.09 (0.04)
16	0.24 (6)	0.67 (17)	0.30 (7.5)	8-32 (M4)	0.79 (20)	0.79 (20)	0.22 (5.5)	0.96 (24.5)	1.18 (30)	0.18 (0.08)	0.09 (0.04)
20	0.31 (8)	0.77 (19.5)	0.30 (7.5)	8-32 (M4)	0.91 (23)	0.91 (23)	0.24 (6)	1.02 (26)	1.26 (32)	0.22 (0.10)	0.13 (0.06)
25	0.39 (10)	0.87 (22)	0.31 (8)	10-32 (M5)	1.06 (27)	1.06 (27)	0.26 (6.5)	1.12 (28.5)	1.38 (35)	0.33 (0.15)	0.15 (0.07)
32	0.51 (13)	1.08 (27.5)	0.35 (9)	10-32 (M5)	1.30 (33)	1.30 (33)	0.26 (6.5)	1.14 (29)	1.40 (35.5)	0.55 (0.25)	0.26 (0.12)
40	0.51 (13)	1.24 (31.5)	0.39 (10)	5/16-24 (M8)	1.61 (41)	1.61 (41)	0.26 (6.5)	1.24 (31.5)	1.50 (38)	0.84 (0.38)	0.33 (0.15)
50	0.63 (16)	1.46 (37)	0.41 (10.5)	5/16-24 (M8)	1.89 (48)	1.89 (48)	0.31 (8)	1.38 (35)	1.69 (43)	0.99 (0.45)	0.40 (0.18)
63	0.63 (16)	1.89 (48)	0.51 (13)	3/8-24 (M10)	2.40 (61)	2.40 (61)	0.31 (8)	1.67 (42.5)	1.98 (50.5)	1.81 (0.82)	0.57 (0.26)
80	0.83 (21)	2.24 (57)	0.57 (14.5)	3/8-24 (M10)	2.87 (73)	2.87 (73)	0.35 (9)	1.85 (47)	2.20 (56)	2.65 (1.20)	0.73 (0.33)
100	0.83 (21)	2.64 (67)	0.63 (16)	7/16-20 (M12)	3.56 (90.5)	3.56 (90.5)	0.39 (10)	1.91 (48.5)	2.30 (58.5)	4.03 (1.83)	0.93 (0.42)

Dimensions in inch (mm) Long Stroke versions (columns ZH and ZJ), > 2" (>50mm), incorporate a longer rod bearing which increases the overall body by .394" (10mm).

NORGREN ENGINEERING ADVANTAGE

Series 92000 compact actuators

DC/92000/M Double acting

DC/92000/JM – Cylinders with double ended piston rod

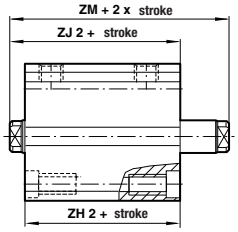

Ø	ZH2	ZJ2	ZM
16	1.16 (29.5)	1.38 (35)	1.61 (41)
20	1.24 (31.5)	1.48 (37.5)	1.73 (44)
25	1.36 (34.5)	1.61 (41)	1.89 (48)
32	1.44 (36.5)	1.69 (43)	1.97 (50)
40	1.56 (39.5)	1.81 (46)	2.09 (53)
50	1.65 (42)	1.97 (50)	2.32 (59)
63	2.05 (52)	2.36 (60)	2.72 (69)
80	2.20 (56)	2.56 (65)	2.91 (74)
100	2.28 (58)	2.68 (68)	3.07 (78)

Dimensions in inch (mm)

DC/92000/N2 – Cylinders with non-rotating piston rod

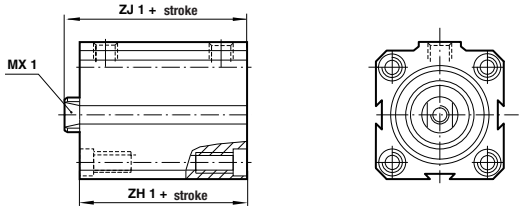

Ø	MX1 (A/F)	ZH1	ZJ1	Max. Torque inch lb(Nm)
16	0.24 (6)	1.36 (34.5)	1.57 (40)	1.33 (0.15)
20	0.31 (8)	1.42 (36)	1.65 (42)	2.21 (0.25)
25	0.39 (10)	1.50 (38)	1.77 (45)	3.54 (0.40)
32	0.51 (13)	1.54 (39)	1.79 (45.5)	6.64 (0.75)
40	0.51 (13)	1.63 (41.5)	1.89 (48)	6.64 (0.75)
50	0.63 (16)	1.77 (45)	2.09 (53)	13.28 (1.50)
63	0.63 (16)	2.07 (52.5)	2.38 (60.5)	13.28 (1.50)
80	0.83 (21)	2.24 (57)	2.60 (66)	22.13 (2.50)
100	0.83 (21)	2.30 (58.5)	2.70 (68.5)	22.13 (2.50)

Dimensions in inch (mm)

DC/92000/N4 – Cylinders with guided piston rod

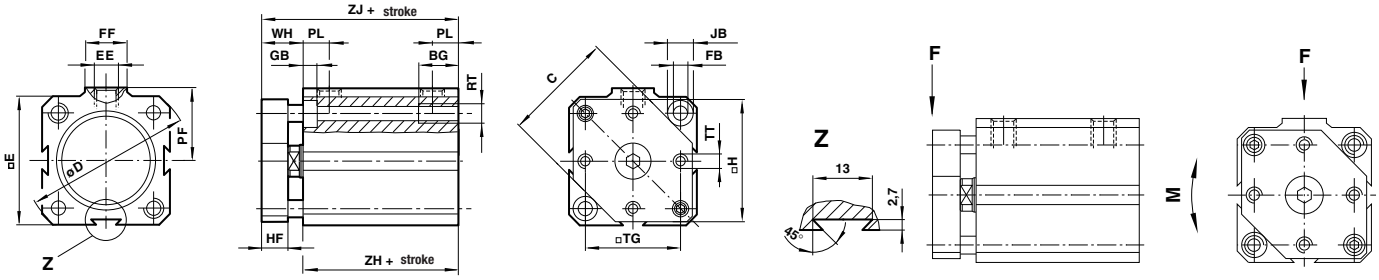

Ø	BG	C	Ø D	❑ E	EE	Ø FB	FF	GB	❑ H	HF	Ø JB	PF	PL	RT	TG	TT	WH	ZH	ZJ
16	0.35 (9)	0.83 (21)	1.44 (36.5)	1.10 (28)	10-32 (M5)	0.13 (3.3)	0.39 (10)	0.14 (3.5)	1.02 (26.5)	0.24 (6)	0.24 (6)	0.67 (17)	0.30 (7.5)	8-32 (M4)	0.79 (20)	4-40 (M3)	0.45 (11.5)	0.96 (24.5)	1.42 (36)
20	0.35 (9)	0.98 (25)	1.63 (41.5)	1.26 (32)	10-32 (M5)	0.13 (3.3)	0.39 (10)	0.14 (3.5)	1.18 (30)	0.31 (8)	0.24 (6)	0.77 (19.5)	0.30 (7.5)	8-32 (M4)	0.91 (23)	4-40 (M3)	0.55 (14)	1.02 (26)	1.57 (40)
25	0.47 (12)	1.16 (29.5)	1.89 (48)	1.46 (37)	10-32 (M5)	0.17 (4.2)	0.39 (10)	0.18 (4.5)	1.38 (35)	0.31 (8)	0.30 (7.5)	0.87 (22)	0.31 (8)	10-32 (M5)	1.06 (27)	8-32 (M4)	0.57 (14.5)	1.12 (28.5)	1.69 (43)
32	0.47 (12)	1.50 (38)	2.28 (58)	1.77 (45)	1/8 NPT (G1/8)	0.17 (4.2)	0.71 (18)	0.18 (4.5)	1.69 (43)	0.39 (10)	0.30 (7.5)	1.08 (27.5)	0.35 (9)	10-32 (M5)	1.30 (33)	8-32 (M4)	0.65 (16.5)	1.14 (29)	1.79 (45.5)
40	0.63 (16)	1.83 (46.5)	2.81 (71.5)	2.17 (55)	1/8 NPT (G1/8)	0.27 (6.8)	0.71 (18)	0.26 (6.5)	2.05 (52)	0.39 (10)	0.41 (10.5)	1.24 (31.5)	0.39 (10)	5/16-24 (M8)	1.61 (41)	10-32 (M5)	0.65 (16.5)	1.24 (31.5)	1.89 (48)
50	0.63 (16)	2.22 (56.5)	3.19 (81)	2.48 (63)	1/8 NPT (G1/8)	0.27 (6.8)	0.71 (18)	0.26 (6.5)	2.36 (60)	0.47 (12)	0.41 (10.5)	1.46 (37)	0.41 (10.5)	5/16-24 (M8)	1.89 (48)	1/4-28 (M6)	0.79 (20)	1.38 (35)	2.17 (55)
63	0.79 (20)	2.80 (71)	4.09 (104)	3.15 (80)	1/4 NPT (G1/4)	0.33 (8.5)	0.87 (22)	0.33 (8.5)	2.99 (76)	0.47 (12)	0.53 (13.5)	1.89 (48)	0.51 (13)	3/8-24 (M10)	2.40 (61)	5/16-24 (M8)	0.79(20)	1.67 (42.5)	2.46 (62.5)
80	0.79 (20)	3.50 (89)	4.72 (120)	3.70 (94)	1/4 NPT (G1/4)	0.33 (8.5)	0.87 (22)	0.33 (8.5)	3.54 (90)	0.63 (16)	0.53 (13.5)	2.24 (57)	0.57 (14.5)	3/8-24 (M10)	2.87 (73)	3/8-24 (M10)	0.98 (25)	1.85 (47)	2.83 (72)
100	0.98 (25)	4.33 (110)	5.85 (148.5)	4.59 (116.5)	1/4 NPT (G1/4)	0.40 (10.2)	0.87 (22)	0.41 (10.5)	4.45 (113)	0.79 (20)	0.65 (16.5)	2.64 (67)	0.63 (16)	7/16-20 (M12)	3.56 (90.5)	7/16-20 (M12)	1.18 (30)	1.91 (48.5)	3.09 (78.5)

Dimensions in inch (mm) Long Stroke versions (columns ZH and ZJ), > 2" (>50mm), incorporate a longer rod bearing which increases the overall body by .394" (10mm).

NOTE: 16 mm bore maximum stroke = 2", 20 mm and 25 mm maximum stroke = 3"
32 mm to 100 mm maximum stroke = 4"

External non-rotating guidance DC/92000/N4 inch, DM/92000/N4 metric – Permissible load and torque

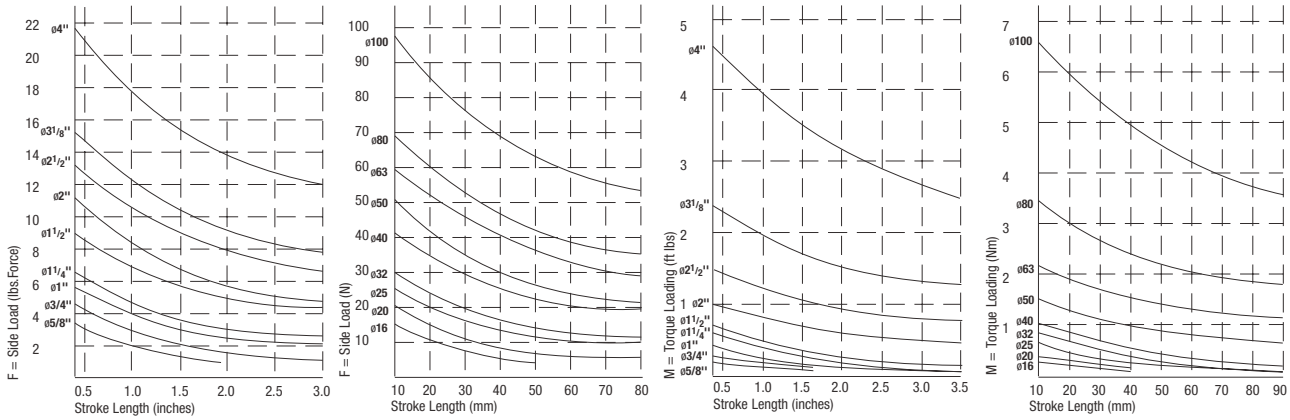

Norgren.com/usa – 303.794.2611 – help@amer.norgren.com

Series 92000 accessories

For DC/91000/M, DC/92000/M, DC/93000/M

Front flange – G
Rear flange – B
QC/900**/22 (inch)
QM/900**/22 (metric)
** insert bore size

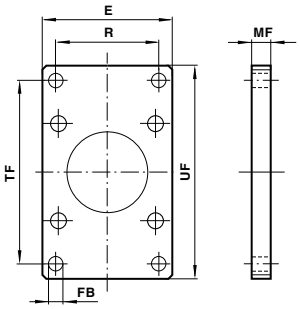

Ø	E	R	Ø FB	MF	TF	UF	lb (kg)
12	1.02 (26)	0.71 (18)	0.14 (4)	0.20 (5)	1.50 (38)	1.81 (46)	0.04 (0.02)
16	1.18 (30)	0.87 (22)	0.14 (4)	0.20 (5)	1.65 (42)	1.97 (50)	0.04 (0.02)
20	1.30 (33)	0.98 (25)	0.14 (4)	0.20 (5)	1.89 (48)	2.20 (56)	0.04 (0.02)
25	1.50 (38)	1.10 (28)	0.18 (5)	0.26 (7)	2.13 (54)	2.52 (64)	0.09 (0.04)
32	1.81 (46)	1.42 (36)	0.18 (5)	0.26 (7)	2.60 (66)	2.99 (76)	0.13 (0.06)
40	2.24 (57)	1.69 (43)	0.26 (7)	0.37 (10)	3.07 (78)	3.62 (92)	0.33 (0.15)
50	2.52 (64)	1.97 (50)	0.26 (7)	0.37 (10)	3.54 (90)	4.09 (104)	0.37 (0.17)
63	3.19 (81)	2.48 (63)	0.33 (9)	0.49 (13)	4.33 (110)	5.04 (128)	0.73 (0.33)
80	3.74 (95)	3.03 (77)	0.33 (9)	0.49 (13)	5.04 (128)	5.75 (146)	0.90 (0.41)
100	4.65 (118)	3.86 (98)	0.43 (11)	0.49 (13)	6.14 (156)	6.93 (176)	1.59 (0.72)

Dimensions in inches (mm)

Foot – C
QC/900**/21 (inch)
QM/900**/21 (metric)
** insert bore size

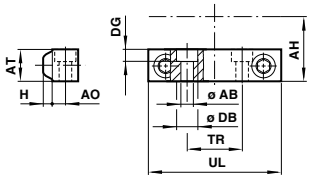

Ø	Ø AB	AH	AO	AT	H	Ø DB	DG
12	0.13 (3)	0.53 (14)	0.16 (4)	0.37 (10)	0.08 (2)	0.24 (6)	0.14 (4)
16	0.13 (3)	0.59 (15)	0.16 (4)	0.37 (10)	0.08 (2)	0.24 (6)	0.14 (4)
20	0.13 (3)	0.65 (17)	0.16 (4)	0.37 (10)	0.08 (2)	0.24 (6)	0.14 (4)
25	0.17 (4)	0.79 (20)	0.20 (5)	0.49 (13)	0.12 (3)	0.30 (8)	0.18 (5)
32	0.17 (4)	0.91 (23)	0.20 (5)	0.49 (13)	0.12 (3)	0.30 (8)	0.18 (5)
40	0.25 (6)	1.12 (29)	0.26 (7)	0.63 (16)	0.18 (5)	0.41 (11)	0.26 (7)
50	0.25 (6)	1.26 (32)	0.26 (7)	0.63 (16)	0.18 (5)	0.41 (11)	0.26 (7)
63	0.33 (8)	1.63 (42)	0.31 (8)	0.87 (22)	0.22 (6)	0.53 (14)	0.33 (9)
80	0.33 (8)	1.93 (49)	0.31 (8)	1.00 (26)	0.22 (6)	0.53 (14)	0.33 (9)
100	0.41 (11)	2.34 (60)	0.35 (9)	1.12 (29)	0.26 (7)	0.65 (17)	0.41 (11)

Ø	TR	UL	lb (kg)
12	0.98 (25)	1.30 (33)	0.04 (0.02)
16	1.26 (32)	1.57 (43)	0.04 (0.02)
20	1.38 (35)	1.69 (43)	0.04 (0.02)
25	1.61 (41)	2.01 (51)	0.09 (0.04)
32	0.75 (19)	1.81 (46)	0.09 (0.04)
40	0.83 (21)	2.20 (56)	0.22 (0.10)
50	1.06 (27)	2.52 (64)	0.24 (0.11)
63	1.34 (34)	3.19 (81)	0.29 (0.13)
80	1.73 (44)	3.74 (95)	0.40 (0.18)
100	2.20 (56)	4.65 (118)	1.06 (0.48)

Dimensions in inches (mm)

Piston rod clevis – F
Part numbers in table below.

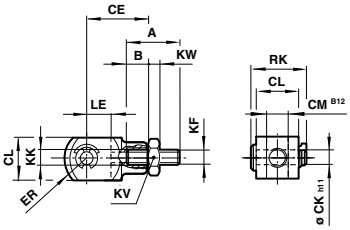

Bore Ø	1/2" (12)	5/8" (16)	3/4" (20)	1" (25)	1-1/4" (32)	1-1/2" (40)	2" (50)	2-1/2" (63)	3-1/8" (80)	4" (100)
Clevis Inch	RC-12	RC-16	RC-20	RC-25	RC-32	RC-32	RC-50	RC-63	RC-80	RC-80
Metric	QM/57008/25	QM/8010/25	QM/92020/25	QM/57016/25	QM/57020/25	QM/57020/25	QM/57025/25	QM/57040/25	QM/57063/25	QM/57063/25
Stud Inch	C-653-24-00J	C-653-04-00M	C-653-05-00P	C-653-08-01A	C-653-11-01A	C-653-11-01A	C-653-14-01E	C-653-16-01P	C-653-18-01J	C-653-18-01J
Metric	M/P1710/18	M/P1710/19	M/P1710/20	M/P1710/21	M/P1710/22	M/P1710/22	–	–	–	–
Nut Inch	C-76-36	C-76-37	C-76-225	C-76-03A	C-76-04A	C-76-04A	C-76-05A	C-76-065A	C-76-12A	C-76-12A
Metric	M/P1500/111	M/P1501/80	M/P1501/109	M/P1501/79	M/P1501/60	M/P1501/60	–	–	–	–
Adaptor (mm)	–	–	–	–	–	–	M/P71470/1	M/P71470/2	M/P71470/3	M/P71470/3

Bore Ø	A	B	CE	Ø CK h11	❑ CL	CM B12	ER	KF	KK	KV (A/F)	KW	LE	RK
12	12	–	0.43 (11)	0.12 (3)h9	0.24 (6)	0.12 (3)	0.18 (4.5)	M3	M3	0.24 (6)	0.08 (2)	0.20 (5)	0.39 (10)
16	16	–	0.63 (16)	0.16 (4)	0.31 (8)	0.16 (4)	0.25 (6.5)	M4	M4	0.28 (7)	0.08 (2	0.31 (8)	0.45 (11.5)
20	20	–	0.79 (20)	0.20 (5)	0.39 (10)	0.20 (5)	0.31 (8)	M5	M5	0.31 (8)	0.98 (2.5)	0.39 (10)	0.57 (14.5)
25	25	–	0.79 (20)	0.20 (5)	0.39 (10)	0.20 (5)	0.31 (8)	M6	M6	0.39 (10)	0.12 (3)	0.39 (10)	0.57 (14.5)
32 & 40	25	–	0.94 (24)	0.24 (6)	0.47 (12)	0.24 (6)	0.37 (9.5)	M8	M8	0.51 (13)	0.16 (4)	0.47 (12)	0.69 (17.5)
50	29	0.47 (12)	1.31 (33)	0.31 (8)	0.55 (14)	0.28 (7)	0.45 (11.5)	M10	M10x1.25	0.47 (12)	0.20 (5)	0.47 (12)	0.81 (20.5)
63	35	0.59 (15)	1.57 (40)	0.39 (10)	0.79 (20)	0.39 (10)	0.63 (16)	M12	M12x1.25	0.51 (13)	0.20 (5)	0.79 (20)	1.14 (29)
80 &100	45	0.79 (20)	2.20 (56)	0.55 (14)	1.06 (27)	0.55 (14)	0.83 (21)	M16	M16x1.5	0.67 (17)	0.20 (5)	1.10 (28)	1.44 (36.5)

Dimensions in inches (mm)

Back to back mounting kit
QC/920**/55 (inch)
QM/920**/55(metric)
** insert bore size

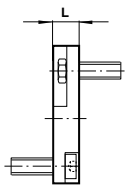

Bore Ø	L
12	.39 (10)
16	.39 (10)
20	.39 (10)
25	.39 (10)
32	.39 (10)
40	.59 (15)
50	.59 (15)
63	.79 (20)
80	.79 (20)
100	.79 (25)

NORGREN ENGINEERING ADVANTAGE

Magnetically Operated Switches

Magnetically operated, non-contact sensing system

Consists of a magnet on the piston, and a sensing switch mounted to the cylinder tube

Switch types:
Read switch
Solid State -
NPN
PNP

Switch series:
CS7
CS8
CS8-2
CS9D
CD9-04
M/50

Reed Switch Working Principle

Reed switch sensors contain hermetically sealed reed elements (mechanical contacts) which are open in their normal state. When a magnetic field moves within proximity of the switch, magnetism is induced into the leads and forces the contacts to close.

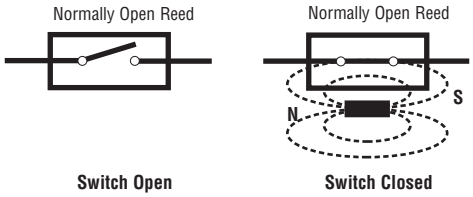

Solid State/Magnetoresistive Working Principle

The solid state (no moving parts) magnetoresistive sensor responds to a parallel magnetic pole by providing a digital signal to the output control circuit. This technique enables the sensing of weak magnetic fields, with no limit to the maximum strength of the magnetic field. Norgren solid state switches are similar to the Hall effect switch.

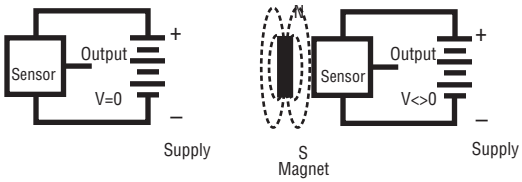

Application Recommendations and Precautions

To provide maximum reliability.

1. Always stay within the specifications and power rating limitations of the unit installed.
2. Primary and control circuit wiring should not be mixed in the same conduit. Motors will produce high pulses that will be introduced into the control wiring if the wiring is carried in the same conduit.
3. Never connect the switch without a load present. The switch will be destroyed.
4. Some electrical loads may be capacitive. Capacitive loading may occur due to distributed capacity in cable runs over 25 feet. Use switch Model CS7-24 whenever capacitive loading may occur.

In order to obtain optimum performance and long life, magnetically operated limit switches should not be subjected to:

(1) strong magnetic fields,

(2) extreme temperature, and (3) excessive ferrous filing or chip buildup.

Improper wiring may damage or destroy the switch. The wiring diagram, along with the listed power ratings, must be carefully observed before connecting power to the switch.

Lower power switches are designed for signaling electronic circuits. Do not use on relay loads or with incandescent bulbs. Resistive loads only.

Norgren.com/usa – 303.794.2611 – help@amer.norgren.com

Magnetically operated switches

Switches available by Cylinder Series

A & EA Series NFPA

CS8-2-* (1-1/2"-2-1/2" Bores)
CS7-* (2" - 12" Bores)
CS9-04 (2" - 8" Bores)

J & EJ Series NFPA

CS8-2-* (1-1/2"-2-1/2" Bores)
CS7-* (2" - 12" Bores)
CS9-04 (2" - 8" Bores)

LS Series Thrusters

CS8-2-* (1-1/2" & 2" Bores)
CS7-* (2" Bores)
CS8* (1-1/2" & 2" Bores)

NEN Series NFPA

M/NEN/A
M/NEN/N

SS Series NFPA

CS8-2-* (1-1/8"-2-1/2" Bores)
CS7-* (2" - 8" Bores)

N Series

CS8-2-* (1-1/2"-2-1/2" Bores)
CS7-* (2" - 4" Bores)

Tiny Tim Series
(T,VT,ET,TA,TAV,TAE)

CS8-2-* (3/4" - 1-1/8" Bores)

Lintra Plus

M/50*

Lintra Lite

M/50* (w/ M/P72487 bracket)

ISO/VDMA (DA/8000)

M/50* (with QM/27/2/1 bracket)
TM/50* (with QM/27/2/1 bracket)

ISO/VDMA (PDA/182000)

M/50*
TM/50*

Rotary Actuators

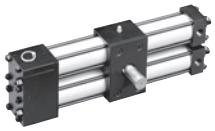

CS8-2-* (1-1/8"-2-1/2" Bores)
CS7-* (2" - 2-1/2" Bores)

Roundline Plus

CS8-* -04,-31,-32 (9/16"-3")
CS9D* (5/16" - 3" Bores)

RPHD Magnetic

CS8-* -04,-31,-32 (9/16"-2-1/2")
CS9D* (9/16" - 2-1/2" Bores)

RPD Delrin

CS8-* -04,-31,-32 (9/16"-2")
CS9D* (9/16" - 2" Bores)

RT Thrusters

CS8-* -04,-31,-32 (9/16"-3")
CS9D* (9/16" - 3" Bores)

F-Series Plus

CS9D* (9/16" - 4" Bores)

FPT Series Twin Rod

CS9D* (3/4" - 2" Bores)

90000 Series Compact

M/50* (w/ M/P72487 bracket)
TM/50* (w/ M/P72487 bracket)

NORGREN
ENGINEERING ADVANTAGE

Magnetically operated switches

CS8-2-* and CS7-* Switches (tie rod mounting bracket included)

Magnetic Switch (includes mounting bracket)	*Switch P/N	Bore	Type		Function	Switching Voltage	Switching Current	Switching Power
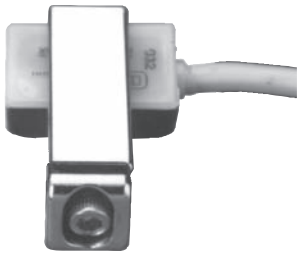	CS8-2-04	3/4" - 2-1/2"	Reed	*MOV & Light	SPST Normally Open	5-120 VDC/VAC 50/60 Hz	.5 Amp max. .005 Amp min.	10 VA
	CS8-2-04P	3/4" - 2-1/2"	Reed	*MOV & Light	SPST Normally Open	5-120 VDC/VAC 50/60 Hz	.5 Amp max. .005 Amp min.	10 VA
	CS8-2-31	3/4" - 2-1/2"	Solid State	Light, Sourcing PNP	Normally Open	6-24 VDC	.5 Amp max.	12 Watts max.
	CS8-2-31P	3/4" - 2-1/2"	Solid State	Light, Sourcing PNP	Normally Open	6-24 VDC	.5 Amp max.	12 Watts max.
	CS8-2-32	3/4" - 2-1/2"	Solid State	Light, Sinking NPN	Normally Open	6-24 VDC	.5 Amp max.	12 Watts max.
	CS8-2-32P	3/4" - 2-1/2"	Solid State	Light, Sinking NPN	Normally Open	6-24 VDC	.5 Amp max.	12 Watts max.
	CS7-04	2" - 6"	Reed	*MOV & Light	Normally Open	5-240 VDC/VAC 50/60 Hz	1 Amp max.	30 Watts max.
	CS7-04-12P	2" - 6"	Reed	*MOV & Light	Normally Open	5-240 VDC/VAC 50/60 Hz	1 Amp max.	30 Watts max.
	CS7-9-04	7" - 8"	Reed	*MOV & Light	Normally Open	5-240 VDC/VAC 50/60 Hz	1 Amp max.	30 Watts max.
	CS7-10-04	10"-12"	Reed	*MOV & Light	Normally Open	5-240 VDC/VAC 50/60 Hz	1 Amp max.	30 Watts max.
	CS7-31	2" - 6"	Solid State	Light, Sourcing PNP	Normally Open	6-24 VDC	1 Amp max.	24 Watts max
	CS7-31P	2" - 6"	Solid State	Light, Sourcing PNP	Normally Open	6-24 VDC	1 Amp max.	24 Watts max
	CS7-9-31	7" - 8"	Solid State	Light, Sourcing PNP	Normally Open	6-24 VDC	1 Amp max.	24 Watts max
	CS7-32	2" - 6"	Solid State	Light, Sinking NPN	Normally Open	6-24 VDC	1 Amp max.	24 Watts max.
	CS7-32P	2" - 6"	Solid State	Light, Sinking NPN	Normally Open	6-24 VDC	1 Amp max.	24 Watts max.
	CS7-9-32	7" - 8"	Solid State	Light, Sinking NPN	Normally Open	6-24 VDC	1 Amp max.	24 Watts max.
	CS7-24	2" - 6"	Reed	*MOV & Light, 3 wire	Normally Open	24-240 VAC 50/60 Hz	4 Amp max. 50 Amp Inrush	100 Watts max.
	CS7-9-24	7" - 8"	Reed	*MOV & Light, 3 wire	Normally Open	24-240 VAC 50/60 Hz	4 Amp max. 50 Amp Inrush	100 Watts max.
	CS9-04	2" - 8"	Reed		Normally Open	0-120 VAC/VDC 50/60 Hz	0.5 Amp Ma	10 Watts max.

All CS- switches require a magnetic sensitivity of 85 Gauss

CS8-2 Series

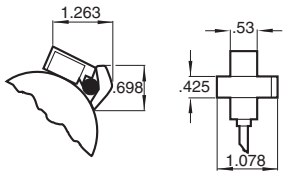

Magnetically operated switches (cont)

CS8-2-* and CS7-* Switches (tie rod mounting bracket included)

Max Voltage Drop	Enclosure Classification	Temperature Rating	Lead Wire Length	Plug-In Cable	Wiring Diagrams Hard Wired
3.5 Volts	NEMA 6 & CSA Approved	-22 F to + 176 F	9 Feet	N/A	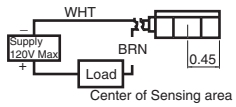
3.5 Volts	NEMA 6 & CSA Approved	-22 F to + 176 F	8 mm Plug-in	CS8-PIC-2 (2m) CS8-PIC-5 (5m)	
.5 Volts	NEMA 6 & CSA Approved	-22 F to + 176 F	9 Feet	N/A	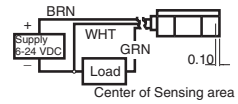
.5 Volts	NEMA 6 & CSA Approved	-22 F to + 176 F	8mm plug-in	CS8-PIC-2 (2m) CS8-PIC-5 (5m)	
.5 Volts	NEMA 6 & CSA Approved	-22 F to + 176 F	9 Feet	N/A	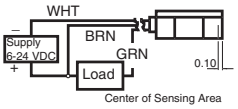
.5 Volts	NEMA 6 & CSA Approved	-22 F to + 176 F	8mm plug-in	CS8-PIC-2 (2m) CS8-PIC-5 (5m)	
3 Volts	NEMA 6 & CSA Approved	-22 F to + 176 F	9 Feet	N/A	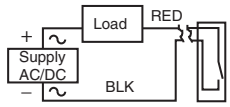
3 Volts	NEMA 6 & CSA Approved	-22 F to + 176 F	12 mm plug-in	CS7-PIC-5 (5m) CS7-PIC-10 (10m)	
3 Volts	NEMA 6 & CSA Approved	-22 F to + 176 F	9 Feet	N/A	
3 Volts	NEMA 6 & CSA Approved	-22 F to + 176 F	9 Feet	N/A	
.5 Volts	NEMA 6 & CSA Approved	-22 F to + 176 F	9 Feet	N/A	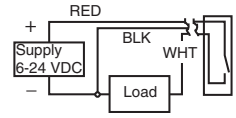
.5 Volts	NEMA 6 & CSA Approved	-22 F to + 176 F	12mm plug-in	CS7-PIC-5 (5m) CS7-PIC-10 (10m)	
.5 Volts	NEMA 6 & CSA Approved	-22 F to + 176 F	9 Feet	N/A	
.5 Volts	NEMA 6 & CSA Approved	-22 F to + 176 F	9 Feet	N/A	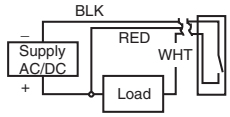
.5 Volts	NEMA 6 & CSA Approved	-22 F to + 176 F	12mm plug-in	CS7-PIC-5 (5m) CS7-PIC-10 (10m)	
.5 Volts	NEMA 6 & CSA Approved	-22 F to + 176 F	9 Feet	N/A	
N/A	NEMA 6 & CSA Approved	-22 F to + 176 F	9 Feet	N/A	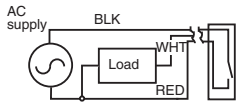
N/A	NEMA 6 & CSA Approved	-22 F to + 176 F	9 Feet	N/A	
N/A	NEMA 1,4, and 13 (General Location)	-4 F to +176 F	9 Feet	N/A	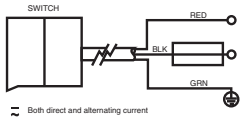

CS7 Series

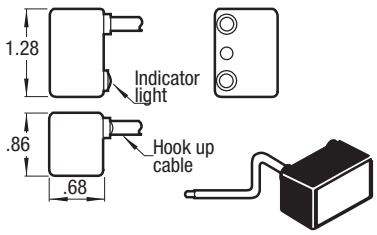

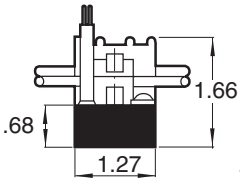

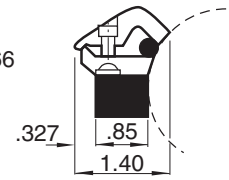

NORGREN ENGINEERING ADVANTAGE

Magnetically operated switches

M/NEN/* Switches (switch only)

Magnetic Switch (Bracket sold separately)	Switch P/N	Bore	Type		Function	Switching Voltage	Switching Current	Switching Power
	M/NEN/A	1-1/2" - 4"	Reed	Light, (Green LED)	Normally Open	5-240 VDC/VAC	100mA max.	10 Watts max.
	M/NEN/N	1-1/2" - 4"	Solid State	Light, Sinking NPN (Red LED)	Normally Open	5-30 VDC	200mA max.	6 Watts max.

CS8* Switches (strap mount included)

Magnetic Switch (includes mounting strap)	Switch P/N	Bore	Type		Function	Switching Voltage	Switching Current	Switching Power
	CS8-04	7/16" - 3"	Reed	*MOV & Light	SPST Normally Open	5-120 VDC/VAC 50/60 Hz	.5 Amp max. .005 Amp min.	10 VA
	CS8-04P	7/16" - 3"	Reed	*MOV & Light	SPST Normally Open	5-120 VDC/VAC 50/60 Hz	.5 Amp max. .005 Amp min.	10 VA
	CS8-31	7/16" - 3"	Solid State	Light, Sourcing PNP	Normally Open	6-24 VDC	.5 Amp max.	12 Watts max.
	CS8-31P	7/16" - 3"	Solid State	Light, Sourcing PNP	Normally Open	6-24 VDC	.5 Amp max.	12 Watts max.
	CS8-32	7/16" - 3"	Solid State	Light, Sinking NPN	Normally Open	6-24 VDC	.5 Amp max.	12 Watts max.
	CS8-32P	7/16" - 3"	Solid State	Light, Sinking NPN	Normally Open	6-24 VDC	.5 Amp max.	12 Watts max.

CS9D* Switches (switch only, mounting bracket not included)

	Switch P/N	Bore	Type		Function	Switching Voltage	Switching Current	Switching Power
	CS9D-0-02	5/16" - 4"	Reed	LED	SPST Normally Open	5-120 VDC/VAC 50/60 Hz	.03 Amp max. .001 Amp min.	4 Watts max.
	CS9D-3-02	5/16" - 4"	Reed	8mm quick disconnect w/ LED	SPST Normally Open	5-120 VDC/VAC 50/60 Hz	.03 Amp max. .001 Amp min.	4 Watts max.
	CS9D-0-31	5/16" - 4"	Solid State	PNP w/ LED	Normally Open	5-28 VDC	.2 Amp max.	4.8 Watts max.
	CS9D-3-31	5/16" - 4"	Solid State	PNP 8mm quick disconnect w/ LED	Normally Open	5-28 VDC	.2 Amp max.	4.8 Watts max.
	CS9D-0-32	5/16" - 4"	Solid State	NPN w/ LED	Normally Open	5-28 VDC	.2 Amp max.	4.8 Watts max.
	CS9D-3-32	5/16" - 4"	Solid State	NPN 8mm quick disconnect w/ LED	Normally Open	5-28 VDC	.2 Amp max.	4.8 Watts max.

Magnetically operated switches (cont.)

M/NEN/* Switches (switch only)

Max Voltage Drop	Enclosure Classification	Temperature Rating	Lead Wire Length	Mounting Bracket		Wiring Diagrams
2.5 Volts max.	IP 67 (NEMA 6)	14 F to 158 F	2 meters	1-1/2" bore	QM/NEN1/SB	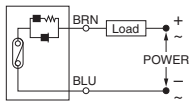
				2"-2-1/2" bore	QM/NEN2/SB	
.5 volts max.	IP 67 (NEMA 6)	14 F to 158 F	2 meters	3-1/4"-4" bore	QM/NEN3/SB	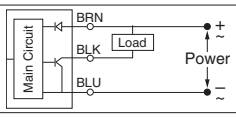

QM/NEN/* Bracket sold separately from switch

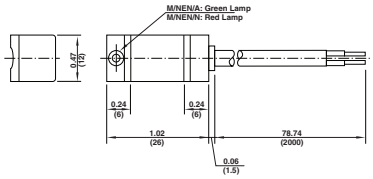

CS8* Switches (strap mount included)

Max Voltage Drop	Enclosure Classification	Temperature Rating	Lead Wire Length	Plug-In Cable	Wiring Diagrams Hard Wired
3.5 Volts	NEMA 6	-22 F to + 176 F	9 Feet	N/A	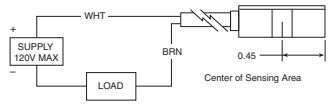 CS8-04
3.5 Volts	NEMA 6	-22 F to + 176 F	8 mm plug-in	CS8-PIC-2 (2m) CS8-PIC-5 (5m)	
.5 Volts	NEMA 6	-22 F to + 176 F	9 Feet	N/A	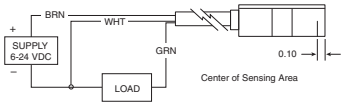 CS8-31 (Source)
.5 Volts	NEMA 6	-22 F to + 176 F	8 mm plug-in	CS8-PIC-2 (2m) CS8-PIC-5 (5m)	
.5 Volts	NEMA 6	-22 F to + 176 F	9 Feet	N/A	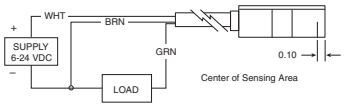 CS8-32 (Sink)
.5 Volts	NEMA 6	-22 F to + 176 F	8 mm plug-in	CS8-PIC-2 (2m) CS8-PIC-5 (5m)	

CS8* Switch & Mounting strap dimensnions

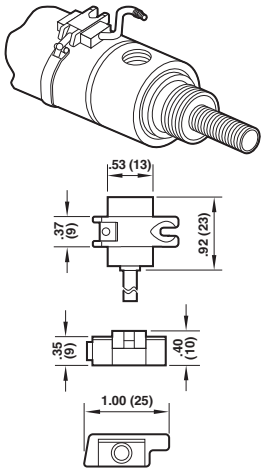

CS9D* Switches (switch only, mounting bracket not included)

Max Voltage Drop	Enclosure Classification	Temperature Rating	Lead Wire Length	Plug-In Cable	Wiring Diagrams Hard Wired
3.5 Volts	NEMA 6	-20 F to + 80F		N/A	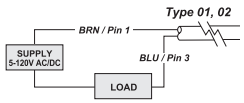
3.5 Volts	NEMA 6	-20 F to + 80F	8 mm plug-in	CS00-00-02 (2m) CS00-00-05 (5m)	
1.0 Volts Max.	NEMA 6	-20 F to + 80F		N/A	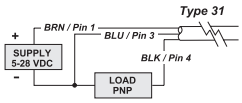
1.0 Volts Max.	NEMA 6	-20 F to + 80F	8 mm plug-in	CS00-00-02 (2m) CS00-00-05 (5m)	
1.0 Volts Max.	NEMA 6	-20 F to + 80F		N/A	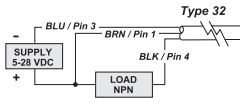
1.0 Volts Max.	NEMA 6	-20 F to + 80F	8 mm plug-in	CS00-00-02 (2m) CS00-00-05 (5m)	

CS9D-3-00 (sold separately)

Mounting Strap for:
Roundline Plus, RT, RPD, RPHD

CS9D-F-00 (sold separately)

F-Plus, FPT (9/16" - 1-1/16" Bore)

CS9D-J-00 (sold separately)

F-Plus, FPT (1-1/2" - 4" Bore)

NORGREN
ENGINEERING ADVANTAGE

Magnetically operated switches

M/50* Switches

IP-66

IP-66 with M8 plug*

Magnetic Switch	Switch P/N	Cable Material	Type		Wire Connection	Function	Voltage	Switching Current
	M/50/EAN/*V	PVC	Solid State	Sinking (NPN) LED	3 Wire	Normally Open	10-30 VDC	150 mA
	M/50/EAN/CP	Plug in	Solid State	Sinking (NPN) LED	3 Wire	Normally Open	10-30 VDC	150 mA
	M/50/EAP/*V	PVC	Solid State	Sourcing (PNP) LED	3 Wire	Normally Open	10-30 VDC	150 mA
	M/50/EAP/CC	Plug in	Solid State	Sourcing (PNP) LED	3 Wire	Normally Open	10-30 VDC	150 mA
	M/50/EAP/CP	Plug in	Solid State	Sourcing (PNP) LED	3 Wire	Normally Open	10-30 VDC	150 mA
	M/50/EXP/5V (ATEX)	PVC	Solid State	Sourcing (PNP) LED	3 Wire	Normally Open	10-30 VDC	150 mA
	M/50/LSU/*V	PVC	Reed	LED	2 Wire	Normally Open	10-240 VAC 10-170 VDC	180 mA
	M/50/LSU/5U	Polyurethane	Reed	LED	2 Wire	Normally Open	10-240 VAC 10-170 VDC	180 mA
	M/50/LSU/CC	Plug in	Reed	LED	2 Wire	Normally Open	10-240 VAC 10-170 VDC	180 mA
	M/50/LSU/CP	Plug in	Reed	LED	2 Wire	Normally Open	10-60 VAC 10-75 VDC	180 mA
	M/50/LXU/5V (ATEX)	PVC	Reed	LED	2 Wire	Normally Open	10-240 VAC 10-170 VDC	180 mA
	M/50/RAC/5V (changeover)	PVC	Reed	-	3 Wire	Changeover	10-240 VAC 10-170 VDC	180 mA
*Plug sold separately	TM/50/RAU/*S (high temp.)	Silicone	Reed	-	2 Wire	Normally Open	10-240 VAC 10-170 VDC	180 mA

The M/50 switch is supplied with an adaptor which will allow it to be used in place of QM/33, QM/34, and QM/134.

Bracket for ISO/VDMA DA/8000 Series = **QM/27/2/1**
Bracket for A44000(Intra Lite) and 90000 Series = **M/P72487**

QM/27/2/1

M/P72487

Magnetically operated switches (cont.)

M/50* Switches

Switching Power	Contact Resistance	Operating Temperature	Protection Rating	Cable Length	Plug-in Cable
4.5 W	N/A	-20 C to +80 C	IP67 (DIN 40050)	*Insert 2 = 2 Meters *Insert 5 = 5 Meters *Insert 10 = 10 Meters	N/A
4.5 W	N/A	-20 C to +80 C	IP67 (DIN 40050)	0.3 Meters with M8 x 1 Cable Plug	M/P73001/5 (PVC) M/P73002/5 (PUR) (5 meters)
4.5 W	N/A	-20 C to +80 C	IP67 (DIN 40050)	*Insert 2 = 2 Meters *Insert 5 = 5 Meters *Insert 10 = 10 Meters	N/A
4.5 W	N/A	-20 C to +80 C	IP67 (DIN 40050)	0.3 Meters with M12 x 1 Cable Plug	M/P34614/5 (PVC) M/P34595/5 (PUR) (5 meters)
4.5 W	N/A	-20 C to +80 C	IP67 (DIN 40050)	0.3 Meters with M8 x 1 Cable Plug	M/P73001/5 (PVC) M/P73002/5 (PUR) (5 meters)
4.5 W	N/A	-20 C to +50 C	IP67 (DIN 40050)	5 Meters	N/A
10 W	150m Ohm	-20 C to +80 C	IP66 (DIN 40050)	*Insert 2 = 2 Meters *Insert 5 = 5 Meters *Insert 10 = 10 Meters	N/A
10 W	150m Ohm	-20 C to +80 C	IP66 (DIN 40050)	5 Meters	N/A
10 W	150m Ohm	-20 C to +80 C	IP66 (DIN 40050)	0.3 Meters with M12 x 1 Cable Plug	M/P34614/5 (PVC) M/P34595/5 (PUR) (5 meters)
10 W	150m Ohm	-20 C to +80 C	IP66 (DIN 40050)	0.3 Meters with M8 x 1 Cable Plug	M/P73001/5 (PVC) M/P73002/5 (PUR) (5 meters)
10 W	150m Ohm	-20 C to +80 C	IP67 (DIN 40050)	5 Meters	N/A
10 W	150m Ohm	-20 C to +80 C	IP66 (DIN 40050)	5 Meters	N/A
10 W	150m Ohm	-20 C to +150 C	IP66 (DIN 40050)	*Insert 2 = 2 Meters *Insert 10 = 10 Meters	N/A